Architecture
Engineering
Planning
Technology
Facility Consulting

11 Greenway Plaza
Suite 2210
Houston, Texas 77046-1104
Telephone: 713/965-0608
Fax: 713/961-4571

ADDENDUM NO. 01
January 13, 2022

To Drawings and Specifications dated December 17, 2021

CLINE ELEMENTARY SCHOOL CAMPUS REPLACEMENT
FOR FRIENDSWOOD I.S.D.

Prepared by: PBK
11 Greenway Plaza, 22nd Floor
Houston, TX 77046-1104
PBK Project No: 20380

Notice to Bidders

A. Receipt of this Addendum shall be acknowledged on the Bid Form.
B. This Addendum forms part of the Contract documents for the above referenced project and shall be incorporated integrally therewith.
C. Each bidder shall make necessary adjustments and submit his proposal with full knowledge of all modifications, clarifications, and supplemental data included therein. Where provisions of the following supplemental data differ from those of the original Contract Documents, this Addendum shall govern.

RFI / CLARIFICATIONS

General

Item No. 1 Pre-proposal conference sign-in sheets are added on this addendum.

Item No. 2 AIA A-201 11.01 says the contractor provides insurance and 11.02 says the owner provides insurance.
The Owner will not be providing insurance for this project. 11.2.1, 11.2.2, 11.2.3 will be stricken from the Supplementary Conditions. Refer to the CSP under Instructions to Offerors 1.3 Proposal Documents for the insurance required for this project per the Owner.

Item No. 3 How far along are the permits?
Permit review is in progress and expect to be ready for the start of construction.

Item No. 4 Are email submissions for the qualifications accepted?
No, Email submission for Contractor qualification/reference is not allowed.

Item No. 5 Is the sub list due at 2 or 3? Can we move the sub list to 3?
Yes, the sub list submission can be moved to 3:00pm. Refer to revised spec section 00 40 12

Item No. 6 Owner pays permits? Or contractor pays?
Contractor pays per proposal docs

Item No. 7 Please provide an anticipated Notice to Proceed date.
Date is not determined yet.

Civil

Item No. 8 General Note 20 on Sheet C001 indicates that Contractor is to coordinate with utility companies to relocate existing power poles and utility boxes, and the note indicates that "Contractor shall coordinate the relocation and pay any fees." The contractor is not typically required to pay fees for permanent utility relocation, power pole installation, etc. Please confirm that the contractor is not responsible for fees for utility company to install/relocate power poles. Please advise.
The contractor will not be responsible for fees from the utility company. However, the cost associated with relocation of the power poles, utility boxes, etc. need to be covered in the contingency or the bid quote for the project.

Item No. 9 Reference Utility Notes 46 and 47. Note 46 indicates that silt fence is required at all grate inlets. Note 47 indicates that silt fence is required on Stage 1 curb inlets. Will it be acceptable to use other erosion control devices for these as determined sufficient by the SWPPP subcontractor?
As long as silt and material does not enter the storm sewer system, it is acceptable to use other erosion control devices as determined sufficient by the SWPPP subcontractor.

Item No. 10 Reference Note 3 on Sheet C103. The note indicates that Fire lane signs be installed every 75'. Please confirm that signs will be required along the entire length of the fire lane striping as indicated or advise if signage will only be required where striping cannot be installed.
Per the City of Friendswood Fire Marshal, signs will only be required where striping cannot be installed.

Item No. 11 Reference Detail 2 on Sheet C501. Note 3 of this detail indicates to reference Paving plans for subgrade stabilization requirements. Will lime stabilization be required at concrete paving? The paving plans do not define the lime stabilization requirements. What content and depth lime stabilization will be required? Please advise.
Lime stabilization will be required. Refer to Geotech report for depth and content. The report says 6% hydrated lime at a depth of 8 inches. The final lime application rate should be determined after the final soil surface has been exposed.

Item No. 12 Is lime stabilization required at sidewalk paving?
Lime stabilization will not be required under sidewalks unless they are within 10 feet of the proposed building. Refer to Geotech Report.

Item No. 13 Reference Detail 2 on Sheet C501. Note 2 on this detail indicates that if fill is required to bring the pavement subgrade to the required elevation, it must meet PI range of 8 to 20. This is select fill. Is select fill required at all areas beneath paving to bring it up to grade? Typically, it is acceptable to use onsite soils compacted as directed. Please advise.
Select fill is not required under the paving areas, unless within 10 feet of the proposed building. On site soils can be used and compacted as long as the PI range is acceptable.

Item No. 14 Reference detail 6 on Sheet C501. Sawcut joints in pavement are indicated to be 3/8" wide minimum and to be sealed with silicone joint sealing compound. Please confirm that all paving sawcuts or control joints are to have silicone joint sealants. Please advise.
Sidewalk control joints will not require sealant. Expansion joints and isolation joints will require sealant on sidewalks.

Item No. 15 Reference Detail 4 on Sheet C502. Is Mow strip required at all Ornamental Fencing?
Mow strip is required at all Ornamental Fencing per district request.

Item No. 16 Reference Detail 8 on Sheet C505. Will an above ground RPZ be required? This does not appear to be called out on the utility plan. Please advise.

An above ground RPZ will be required for the 4" Domestic water line, and a double detector backflow preventer will be used for the 8" fire line. For the 2" irrigation meter, refer to Landscape drawings.

Landscape

Item No. 17 Reference specification 32 91 13 paragraph 2.1 B indicates that planting soil for turf and seed areas is to be imported topsoil. Can existing topsoil from the site be used in lieu if imported topsoil?
Existing topsoil can be utilized but is not recommended. All Planting Soils will need to be amended to meet the physical properties as described within the specification.

Structural

Item No. 18 Reference detail 2 on Sheet S-030. A note indicates for there to be a Clay Cap on the perimeter of the slab on grade. Subgrade Preparation Note 5 requires select fill at the perimeter of the slab on grade. Please define extent and depth of clay cap if it is required. Is this to be the top 1 foot of soil extending 10' out from building slab, above the select fill? Will this affect the depth of select fill outside perimeter of slab? Please advise.
Refer to revised S-030 sheet.

Item No. 19 Reference Subgrade Preparation Note 1 on Sheet S-030 and Note 15 on Sheet S-030. These notes imply that lime stabilization might be required at the building pad and that the contractor is to submit an allowance pricing for such. There is no place on the proposal form or alternate Proposal form to submit the pricing for this lime stabilization allowance. Please advise.
Refer to revised S-030 sheet.

Item No. 20 Reference note 20 on Sheet S-101A. Reinforcing of slab on grade is described as "#3 at 10" OC or #4 at 16" OC Top and Bottom Each Way. Are two layers of reinforcing required? One at top and one at bottom?
Refer to revised S-101A narratives.

Item No. 21 Reference note 1 on Sheet S-304. Please confirm that Grade beams may be earth formed as long as sides are plumb and sound and any portion of the beams/slab that extend above grade are board formed.
Yes, as long as the earth formed wall meets this criteria and do not slough off more than ¾" out of place of the plumb line as stated in note 1 on S-304, grade beams may be earth formed.

Architectural

Item No. 22 Reference Paragraph 2.6 Finishes of Specification 08 44 13 Glazed Aluminum Curtain Walls. This paragraph indicates that Curtain Walls are to have Baked enamel or powder coat finish in dark bronze. Store front and aluminum door frames are indicated to have an anodized finish. Are aluminum storefront, aluminum door frames, and curtain wall components to have an anodized finish or a powder coated finish? These items are all typically provided with anodized finishes to avoid additional cost of powder coating. Please advise.
All alum frame finish to be dark bronze. No anodized finish.

Item No. 23 Reference Finish Schedules for Various areas. CL-4 and CL-5 ceiling types are not defined in the finish schedule. Please advise.
Refer to revised room finish schedules.

Item No. 24 Reference Sheets A-021, A-022 and Reflected Ceiling Plans. Please confirm that

MC-1 Ceiling types are to be Exposed structure as indicated on the plans, or advise ceiling type. Please advise.
MC-1 is exposed roof deck.

Item No. 25 Reference Detail 16 on Sheet A-426. The detail calls for SS mesh Panel for Risers at the stairs. Are these to be Stainless steel mesh risers? This is not typical. Should this be standard painted A36 steel risers? Also please confirm that only Terrazzo treads are to be provided at terrazzo stairs and no terrazzo risers. Please advise.
Refer to revised material finish legend for railing infill panel information. Powder coated steel mesh riser will be used.

Item No. 26 Are baffles in gymnasium to be ACB-1 Armstrong Feltworks Blades Panels defined in specifications or AB-1 Autex Frontier Baffles Raft Blade Panels?
AB-1 Autex is correct. Spec 09 51 26 is revised.

Item No. 27 ACB is indicated as 24" long blades, drawings indicate 9 foot lengths. Blades can be provided in 24", 48" and 96" lengths. Please clarify lengths of blades. Please advise.
Acoustical Panel AB-1 blade (94.5" long each) to span continuously 32' long minimum at Gym G100.

Item No. 28 What is the extent for MC-1 ceiling type in rooms B101 STR B, B102 Str B, B103 Learning, B104 Str C, and B105 Learning Str? Please clarify and provide RCP for these locations?
Refer to Revised A-202B

Item No. 29 The finish schedule and RCP conflict in the following rooms: A101 Corridor, A125 MDF, A127 Mother, B100 Corridor, B108 Sensory, C112 Elec, C113 IDF, C116 Custodian, E102A Porch, F100 Corridor, F105A cooler/Freezer, B200 Corridor, C204 IDF, C220 IDF, D203A Custodian. Please clarify ceiling types for these rooms.
Refer to revised room finish schedules.

SPECIFICATIONS

Item No. 1 **Section 00 40 12-1 List of Subcontractors**
a. Note revised to 'This document must be executed and submitted with **alternate proposal**.'

Item No. 2 **Section 00 72 00 A-201 General Condition to the Contract for Construction**
a. Deleted Section 11.2 Owner's Insurance.

Item No. 3 **Section 01 23 00 Alternates:** Revised section
L. Alternate 12
Deductive change to remove overhead projector, ceiling mounted speaker, associated structure, and drop-down screen from learning commons. **Remove local sound head end cabinet and equipment, lift, cabling. Refer to Technology drawing T-101B for location and specs for details on items to remove.**

Item No. 4 **Section 03 30 00 Cast-In-Place Concrete**
Section 2.5.B.7, Xypex Admix C-500 revised to Xypex Admix C-1000

Item No. 5 **Section 05 34 00 Acoustical Metal Decking:** Revised section. Refer to attachment.

Item No. 6 **Section 07 21 00 Thermal Insulation:**
2.3 Polyisocyanurate Foam Plastic Board
Added Johns Manville to list of approved manufacturers.

Item No. 7 **Section 08 91 00 Fixed Louver:** Added section.

Item No. 8 **Section 09 51 26 Acoustical Wood Ceilings:** Revised section
2.3 Acoustical Panels
A. Type (~~ACB-1~~ **AB-1**):
1. Basis of Design Product: ~~Feltworks Blades by Armstrong World Industries.~~
Autex; Frontier Baffles Raft Blade; Empire

Item No. 9 **Section 26 05 26 – Grounding and Bonding for Electrical Systems**
a. Removed section 3.5 C

Item No. 8 **Section 26 09 43 – Digital Lighting Controls**
a. Revised 2.1 A to read Acceptable manufacturer: Wattstopper Digital Lighting Management (DLM). System shall not be integrated to BAS
b. Removed section 2.2 B 8, 9, and 10, since this is not a networked system.
c. Removed section 2.11, this section is about DLM relay panels which are not included in this project.

Item No. 9 **Section 26 32 13 – Engine Generators**
a. In section 2.2 A the compression diesel and diesel reference was removed from this paragraph we do not have these on this project.

Item No 10 **Section 27 10 00 Structured Cabling**
a. Section 2.08 – District standard calls for a 25-year system warranty
b. Section 3.03 G – patch cord length – 7' for closet end and 15' for user end, and to confirm with owner.
c. Section 3.03 F – District standard calls for keystone jacks.
d. Section 3.04 – District standard calls for Corning for fiber (also 3.05 B).
e. Section 3.04 D – need to include a length for fiber patch cords.
f. Section 3.05 D - District standard calls for racks by Chatsworth or Hoffman.
g. Section 3.05 E – District standard says vertical cable management is preferred.

Item No 11 **Section 27 51 23.41 Local Sound**
a. Specification has been replaced in its entirety.

Item No 12 **27 53 19 Distribution Antenna System**
a. Section 1.2 – Added to spec: 'Testing of the facility is to be included in the base bid. If an antenna system is determined to be required, the system is to be designated and installed under an allowance.

Item No 13 **28 23 00 CCTV**
a. Section 1.01 has been removed from specification.

Item No 14 **28 31 00 Fire Alarm System**
a. Section 1.7 – Per district standard, for all new buildings the only acceptable manufacturer is Notifier.

DRAWINGS

Item No 01 **Sheet S-030 – GENERAL SUBGRADE NOTES AND TYP DETAILS**

a. General Foundation Note 1 updated. See revised sheet.
b. General Foundation Note 5 added. See revised sheet.
c. Subgrade Preparation Note 5 & 14 revised. See revised sheet.
d. Subgrade Preparation Note 15 removed.
e. Detail 2 & 3 revised. See revised sheet.

Item No 02 **Sheet S-031 – GENERAL SUBGRADE NOTES AND TYP DETAILS – CONT.**

a. Detail 1 revised. See revised sheet.

Item No 03 **Sheet S-100 – 1st LEVEL – TOP OF SLAB-ON-GRADE ELEVATIONS – COMPOSITE**

a. SOG Reinforcement Note revised to following: 5" NW CONCRETE SLAB-ON-GRADE, REINFORCED WITH #3 AT 10" OC OR #4 AT 16" OC EACH WAY ON 3 1/2" CHAIRS SPACED AT 36" OC EACH WAY. PLACE THIS SLAB ON 15MIL WATER VAPOR BARRIER OVER COMPACTED SELECT FILL (SOIL REPORT).

Item No 04 **Sheet S-100S – STRUCTURAL SITE PLAN**

a. (4) Concrete seat walls and (1) Landscaping retaining wall removed from site. See revised sheet.

Item No 05 **Sheet S-101A – FOUNDATION AND 1ST LEVEL PLAN – AREA A**

a. W10x33 Column at Grid intersection SS & 61 revised to HSS8x8x1/4" and offset 4" in plan north and plan west direction.
b. Foundation plan note 20 revised to the following: 5" NW CONCRETE SLAB-ON-GRADE, REINFORCED WITH #3 AT 10" OC OR #4 AT 16" OC EACH WAY ON 3 1/2" CHAIRS SPACED AT 36" OC EACH WAY. PLACE THIS SLAB ON 15MIL WATER VAPOR BARRIER OVER COMPACTED SELECT FILL (SOIL REPORT). REF TO SLAB JOINT 1/S-302 AND 2/S-302.

Item No 06 **Sheet S-101B – FOUNDATION AND 1ST LEVEL PLAN – AREA B**

a. Column at Grid intersection Z & 60 3" in plan west. See revised sheet.
b. Foundation plan note 20 revised to the following: 5" NW CONCRETE SLAB-ON-GRADE, REINFORCED WITH #3 AT 10" OC OR #4 AT 16" OC EACH WAY ON 3 1/2" CHAIRS SPACED AT 36" OC EACH WAY. PLACE THIS SLAB ON 15MIL WATER VAPOR BARRIER OVER COMPACTED SELECT FILL (SOIL REPORT). REF TO SLAB JOINT 1/S-302 AND 2/S-302.
c. Section cuts revised and added at learning commons. See revised sheet.

Item No 07 **Sheet S-101C, S-101D, S-101E, S-101F, S-101G**

a. Foundation plan note 20 revised to the following: 5" NW CONCRETE SLAB-ON-GRADE, REINFORCED WITH #3 AT 10" OC OR #4 AT 16" OC EACH WAY ON 3 1/2" CHAIRS SPACED AT 36" OC EACH WAY. PLACE THIS SLAB ON 15MIL WATER VAPOR BARRIER OVER COMPACTED SELECT FILL (SOIL REPORT). REF TO SLAB JOINT 1/S-302 AND 2/S-302.

Item No 08 **Sheet S-101H – FOUNDATION AND 1ST LEVEL PLAN – AREA H**

a. Foundation plan notes added to sheet. See revised sheet.

Item No 09 **Sheet S-101J – FOUNDATION AND 1ST LEVEL PLAN – AREA J**

a. Foundation plan note 20 revised to the following: 5" NW CONCRETE SLAB-ON-GRADE, REINFORCED WITH #3 AT 10" OC OR #4 AT 16" OC EACH WAY ON 3 1/2" CHAIRS

SPACED AT 36" OC EACH WAY. PLACE THIS SLAB ON 15MIL WATER VAPOR BARRIER OVER COMPACTED SELECT FILL (SOIL REPORT). REF TO SLAB JOINT 1/S-302 AND 2/S-302.

b. Section 8/S-311 cut along Brick wall running parallel with Grid SS at courtyard.

Item No 10 **Sheet S-102A – LOW ROOF FRAMING PLAN – AREA A**

a. Column at Grid intersection SS & 61 offset 4" in plan north and plan west direction (matching S-101A). W14x22 beams connecting to offset column remain aligned with perimeter grid lines and receive an offset connection to HSS column.

Item No 11 **Sheet S-102B – 2ND LEVEL – FRAMING PLAN – AREA B**

a. Column at Grid intersection Z & 60 3" in plan west (matching S-101B). W12x19 beam along Grid Z to remain aligned with Grid Z and receive an offset connection to HSS column.

Item No 12 **Sheet S-102C – 2ND LEVEL – FRAMING PLAN – AREA C**

a. WT5x15 drag strut between Grids 43 & 45 shifted plan south on beam bay.

Item No 13 **Sheet S-300 – GENERAL CONCRETE AND STL REINF NOTES AND TYP DETAILS**

a. Concrete Mix Note 10: All references to Xypex C-500 revised to Xypex C-1000.
b. Cast-In-Place Concrete GC Note 2: All references to Xypex C-500 revised to Xypex C-1000.

Item No 14 **Sheet S-311 – FOUNDATION DETAILS AND SECTIONS**

a. New details 8 & 9 added to sheet. See revised sheet.

Item No 15 **Sheet S-313 – FOUNDATION DETAILS AND SECTIONS**

a. New detail 9 added to sheet. See revised sheet.

Item No 16 **Sheet S-318 – ELEVATOR PIT DETAILS**

a. Replace this sheet in its entirety. See revised sheet.

Item No. 21 **Sheet A-101A1**: Added sheet.

Item No. 22 **Sheet A-101B1:**

a. Revised ceiling types on room finish schedule.
b. Revised brick color on material schedule.
c. Revised detail references on door schedule & glazing schedule.
d. Revised R-1 infill panel

Item No. 23 **Sheet A-101C1, A-101D1, A-101E1, A-101F1, A-101G1, A-102B1, A-102C1, A-102D1, A-102E1**

a. Revised ceiling types on room finish schedule.
b. Revised brick color on material schedule.
c. Revised detail references on door schedule & glazing schedule.
d. Revised door frame size on door schedule.
e. Revised R-1 infill panel

Item No. 24 **Sheet A-102B:** Revised partition type at Fifth Grade B206. Added wall dimensions.

Item No. 25 **Sheet A-202B:** Revised ceiling material hatch on ceiling plan.

Item No. 26 **Sheet A-412:**

a. Revised partition type at Storage D2-3.
b. Added wall dimensions.

Item No. 27 **Sheet A-426, A-427:**

a. Revised note for all infill panels to 'R-1 Infill Panel on 3/4" Steel Frame, Typ'

b. Revise 'SS mesh panel for riser infill where it occurs' to 'R-1 infill panel' on 16/A-426.

Item No. 28 **Sheet A-505:** Added mechanical louvers on wall.

Item No. 29 **Sheet A-722:** Revised wall section details on 02, 08/A-722

Item No. 30 **Sheet A-731:** Added Door head detail 16/A-731.

Item No. 31 **Sheet A-801A:** Revised partition type S10: Change 2hr fire rating to 1hr fire rating.

Item No. 32 **Sheet A-807:** Revised CW-3, CW-4 elevations.

Item No. 33 **Sheet A-844:** Reduced WT-1 tile wall at typical kinder classroom.

Item No. 34 **Sheet AF-001:** Deleted floor transition details.

Item No. 35 **Sheet AF-101B:**

a. Revised LVT-1 floor area at kinder classrooms.
b. Added WT-1 tag at kinder classrooms.

Item No. 36 **Sheet AF-101C:**

a. Revised LVT-1 floor area at kinder classrooms.
b. Added WT-1 tag at kinder classrooms.

Item No. 46 **Sheet M-101A – Mechanical – 1st Level – Floor Plan – Area A**

a. For FCU-A1-01-10, extend 10"x10" supply air duct by 3'-0". For one (1) 8"Ø supply tap serving Principal (A112), add one 90° elbow and 2'-0" duct length.
b. Add 16"x8" return air opening in wall above ceiling for all rooms above room door. Typical 22.

Item No. 47 **Sheet M-101C – Mechanical – 1st Level – Floor Plan – Area C**

a. In First Grade (C123), First Grade (C122), extend two (2) 10"Ø supply air taps by 4'-0" in each classroom.
b. In First Grade (C124), First Grade (C125), First Grade (C126), extend two (2) 8"Ø supply air taps by 4'-0" in each classroom. Add total six (6) 8"Ø 90° elbows.
c. Revise type 'A' supply diffuser serving Corridor (B109) with type 'J' with 8"Ø inlet. Add one (1) 8"Ø 90° elbow and 4'-0" duct length.
d. Add four (4) type 'K' return air grilles in Corridor (B109). Add two (2) type 'B' return air grilles in Corridor (C100).
e. Add two (2) 36"x36" return air openings in wall above ceiling for Innovation lab (C102) in plan West wall. Add two (2) 36"x36" return air openings in wall above ceiling for Innovation lab (C101) in plan West wall.

Item No. 48 **Sheet M-101G – Mechanical – 1st Level – Floor Plan – Area G:** Replace sheet in its entirety.

Item No. 49 **Sheet M-102C – Mechanical – 2nd Level – Floor Plan – Area C**

a. For RTU-B1-01, revise return air duct. Provide 52"x24" internally lined return air duct up to roof top unit on roof. 52"x24" return duct to vertically transition into two (2) 26"x24" internally lined return air ducts. One duct to route above ceiling of SRP (C205) with approx. length 12'-0". One duct to route above ceiling of Resource (C206) with approx. length 5'-0".
b. Add two (2) 72"x20" internally lined return air transfer elbows. Install one (1) in plan North wall of SRP (C205) above ceiling. Install one (1) in plan South wall of Assistant Principal (C209).

c. Revise type ‘N’ sidewall return grille located above door of Resource (C206) to type ‘P’.
d. For RTU-B1-02, revise return air duct. Provide 52”x24” internally lined return air duct up to roof top unit on roof. 52”x24” return duct to vertically transition into two (2) 26”x24” internally lined return air ducts. One duct to route above ceiling of Assistant Principal (C209) with approx. length 6’-0”. One duct to route above ceiling of Diag. (C207) with approx. length 6’-0”.
e. Extend 24”x12” supply air duct serving OA-RTU-C2-02 by 4’-0”.
f. Extend 8”Ø outside air supply duct serving FCU-C2-02-4 by 3’-0”.
g. Add six (6) type ‘B’ return grilles in ceiling of Corridor (B201). Add three (3) type ‘B’ return grilles in ceiling of Corridor (C200).
h. Add supply diffuser tag in Computer Tech Storage (C218) as type ‘A’, 8”Ø, 200 CFM.
j. Add keyed note # 2 for 10”x12” exhaust duct up to exhaust fan on roof serving RR (223, 224).
k. In Fifth Grade (C215), Fourth Grade (C229), Fourth Grade (C230), extend two (2) 10”Ø supply air taps by 4’-0” in each classroom.
l. For elevator shaft provide type ‘D’ return air grille of size 8”x8”. Provide fire damper in duct penetration.
m. In Fourth Grade (C231), Fourth Grade (C232), Fourth Grade (C233), extend two (2) 8”Ø supply air taps by 4’-0” in each classroom.
n. In wall separating Fourth Grade classrooms C229 and C230, provide two (2) 32”x16” internally lined return air elbows above ceiling. In wall separating Fourth Grade classrooms C231 and C232, provide one (1) 32”x16” internally lined return air elbow above ceiling.

Item No. 50 **Sheet M-201A – Mechanical – 1st Level – Piping Plan – Area A**

a. For FCU-A1-01-17, 19, reroute refrigerant lines to avoid crossing over Elec (A107). Approx. length addition for four (4) refrigerant pipes is 3’-0” each.
b. For FCU-A1-01, reroute refrigerant lines to avoid crossing over MDF (A125). Approx. length addition for two (2) refrigerant pipes is 3’-0” each. Added four (4) 45° elbows.
c. Route 1”Ø condensate drain line from roof top unit OA-RTU-A1-01 to lavatory P-trap located in Mothers Room (A127). Approx. length of piping 32’-0”.

Item No. 51 **Sheet M-301 – Mechanical Roof Plan:** Replace sheet in its entirety.

Item No. 52 **Sheet M-603 – Mechanical Details:** Add sheet in its entirety.

Item No. 53 **Sheet ES101 – ELECTRICAL SITE PLAN – COMPOSITE**

a. Deleted two L7 fixtures from the outside theater. Refer to revised drawing.
b. Relocated two S2 parking lot fixtures. Refer to revised drawing.
c. Added one S1 parking lot fixture. Refer to revised drawing.
d. Revised utility pole layout and primary utility run to new transformer. Refer to revised drawing.
e. Added pull boxes to utility service. Refer to revised drawing.
f. Removed general note number 3 and revised keyed notes to reflect drawing changes. Refer to revised drawing.

Item No. 54 **Sheet EP-101A – 1ST LEVEL – POWER PLAN – AREA A**

a. Removed general note number 1.
b. Added intrusion to keyed note number 5 to read power to intrusion security alarm panel.
c. Revised bold note for tamper resistant receptacles to now be general note.
d. Removed two WP/GF receptacles from courtyard.

e. Added WP/GF receptacle to the exterior wall that is on the plan North side of Large Conference Room A119.
f. Relocated WP/GF receptacle that is plan West of Counselor Reception A120 to be further down the exterior wall of building going West.
g. Removed two motors for motorized windows in the Community Room/PTO A128.
h. Added duplex receptacle to the plan West wall of Counselor A122 for power to LCD.
i. Added junction box and branch circuitry to exterior Counselor Reception A120 for door access control.
j. Added junction box and branch circuitry to MDF room A125 for door access control.
k. Added junction box and branch circuitry to MDF room A125 for power to access control system.
l. Revised branch circuitry to MDF room A125 for rack power from 1ELA to 1SLA.
m. Removed disconnect in Reception area A102A.
n. Added duplex receptacle and branch circuitry to plan East wall of Breakroom A105 for power to undercounter ice maker.
o. Removed duplex receptacle and associated branch circuitry for copier located on West wall of Breakroom A105 from 120V to 208V, single phase and replaced with a simplex receptacle.
p. Added duplex receptacle and branch circuitry to plan South wall of Assistant Principal A115 for power to LCD.
q. Removed duplex receptacle and associated branch circuitry from plan East wall of ISS A113.
r. Removed duplex receptacle and associated branch circuitry from wall with door from each office on this sheet per district request.
s. Added duplex receptacle and branch circuitry to plan East wall of Waiting Area A102 for power to LCD.
t. Added duplex receptacle and branch circuitry to plan West wall of Vestibule A100.
u. Added junction box and branch circuitry to all reception area doors for secure vestibule access control. Typical of six.

Item No. 55 **Sheet EP-101B – 1ST LEVEL – POWER PLAN – AREA B**

a. Removed general note number 1.
b. Revised bold note for tamper resistant receptacles to now be general note.
c. Revised receptacles to AC next to the LCD in North West corner of Learning Commons.
d. Added AC duplex receptacle and branch circuitry to workroom/breakroom B112 at the South East corner near refrigerator.
e. Revised circuitry in Library Workroom for the receptacle on the plan North east wall and the receptacles on the plan East wall to be circuited together.

Item No. 56 **Sheet EP-101C – 1ST LEVEL – POWER PLAN – AREA C**

a. Removed general note number 1.
b. Revised bold note for tamper resistant receptacles to now be general note.
c. Added duplex receptacle to plan west wall in front of stair C115.
d. Added junction box and branch circuitry to plan West wall of IDF room C113 for power of an additional security booster panel.
e. Removed receptacle and branch circuitry on plan west wall in room Pass C107.Removed receptacle and branch circuitry on plan west wall in room DBC C106.
f. Revised receptacle on plan south wall in room DBC C106 to be a quad receptacle.
g. Added duplex receptacle and branch circuitry to plan south wall of Innovation lab C101 for power to dishwasher.

h. Removed shape to plan North East corner of innovation lab C102.
i. Revised receptacle aff to +60".
j. Revised receptacle on plan North wall in room SRP C101 to quad receptacle.

Item No. 57 **Sheet EP-101D – 1ST LEVEL – POWER PLAN – AREA D**

a. Removed general note number 1.
b. Revised bold note for tamper resistant receptacles to now be general note.
c. Added WP/GF receptacle and branch circuitry to the exterior wall that is on the plan North side of Stair E room D106.
d. Added quad receptacle and branch circuitry to plan West wall of Life Skills D110.
e. Removed GF receptacle and branch circuitry to plan East wall of RR D109.
f. Removed GF receptacle and branch circuitry to plan North wall of RR D110A.
g. Revised AC receptacle to plan North East corner of room Life Skills D110 to power dishwasher.
h. Added duplex receptacle and branch circuitry to plan South wall of Resource D111 for power to LCD.
i. Added quad receptacle and branch circuitry to plan East wall of Resource D111.

Item No. 58 **Sheet EP-101F – 1ST LEVEL – POWER PLAN – AREA F**

a. Removed general note number 1.
b. Revised bold note for tamper resistant receptacles to now be general note.
c. Added WP/GF receptacle and branch circuitry to the exterior wall that is on the plan South side of Kitchen F105.
d. Added junction box and branch circuitry to plan East wall of Chair Storage for power to local sound system.
e. Added junction box and branch circuitry to plan North wall of IDF room F103 for power of an additional security booster panel.
f. Added duplex receptacle and branch circuitry to plan West wall outside of RR F104 for power of water fountain.
g. Added duplex receptacle and branch circuitry to plan Northeast wall of Cafeteria F101.

Item No. 59 **Sheet EP-101G – 1ST LEVEL – POWER PLAN – AREA G**

a. Removed general note number 1.
b. Revised bold note for tamper resistant receptacles to now be general note.
c. Revised receptacle to plan West of RR G102 to power water fountain and provide it with dedicated branch circuit.
d. Removed switch to plan Southwest of gym.
e. Relocated motorized switch form plan East to West side of Gym G100.
f. Remove WP/GF receptacle and branch circuitry from plan East Kitchen exterior wall.
g. Added duplex receptacle and circuitry to plan South wall of Boiler G111 for power of GWH-2.
h. Remove WP/GF receptacle and branch circuitry from plan West of stage.
i. Added keynote "CONTRACTOR SHALL PRICE AS ALTERNATE. REFER TO ARCHITECT FO ADDITIONAL INFORMATION" in Stage G101 area.
j. Added temporary docking station to plan West wall of generator with note "REFER TO SHEET 501 FOR ADDITIONAL INFORMATION".
k. Relocated WP/GF receptacle plan West of Main Elec. G110 North to be next to door.

Item No. 60 **Sheet EP-102B – 2nd LEVEL – POWER PLAN – AREA B**

a. Removed general note number 1.
b. Revised bold note for tamper resistant receptacles to now be general note.

c. Removed keynote #1 and hidden lines of Gifted and talented B204.

Item No. 61 **Sheet EP-102C – 2nd LEVEL – POWER PLAN – AREA C**

a. Removed general note number 1.
b. Revised bold note for tamper resistant receptacles to now be general note.
c. Added WP/GF receptacle and branch circuitry to exterior wall Plan North of Fourth Grade C230.
d. Removed disconnect in Innovation Lab.
e. Added junction box and branch circuitry to plan East wall of IDF room C220 for power of an additional security booster panel.

Item No. 62 **Sheet EP-102D – 2nd LEVEL – POWER PLAN – AREA D**

a. Removed general note number 1.
b. Revised bold note for tamper resistant receptacles to now be general note.
c. Added WP/GF receptacle and branch circuitry to exterior wall Plan South of Fourth Grade D201.
d. Added duplex receptacle and branch circuitry to plan North wall of Math Coach D209 for power to LCD.
e. Added duplex receptacle and branch circuitry to plan North wall of Literacy Coach D210 for power to LCD.
f. Added duplex receptacle and branch circuitry to plan Northeast of ESL D209 for power to LCD.
g. Added WP/GF receptacle and branch circuitry to exterior wall Plan East of Third Grade D212.

Item No. 63 **Sheet EL – 201A – 1st LEVEL – LIGHTING PLAN – AREA A**

a. Added Bodine or equal to general note number 3 to read automatic transfer devices Bodine or equal for all light fixtures.
b. Removed general note number 4
c. Removed including but not limited to power packs, wiring, etc. to general note number 5 to read control of all light fixtures. Re: division 26.
d. Removed general note number 6.
e. Relocated Wall pack over plan North Door to corridor B100 exterior wall to plan north of doors off glass wall.
f. Relocated Wall pack over plan South Door to corridor B100 exterior wall to plan South of doors off glass wall.
g. Added emergency fixtures to M fixtures in corridor A101 plan West of Clinic A103 and plan Southwest of Community Room/PTO A128.
h. Added emergency fixtures to M fixtures in corridor B100 plan Northwest of plan South doors.
i. Added wall pack and branch circuitry to exterior wall plan North of Storage A128A.
j. Added emergency fixture to plan East 2x4 to Mother's Room A127.
k. Added emergency fixture to plan West 2x4 to ISS A113.
l. Added emergency fixture to ISS A114.
m. Revise switch in clinic to standard switch.
n. Added emergency fixture to J fixture plan Southwest of Vestibule A100.
o. Added J Fixture and branch circuitry under canopy to plan Southeast of Vestibule A100.

Item No. 64 **Sheet EL – 201B – 1st LEVEL – LIGHTING PLAN – AREA B**

a. Added Bodine or equal to general note number 3 to read automatic transfer devices Bodine or equal for all light fixtures.

b. Removed general note number 4
c. Removed including but not limited to power packs, wiring, etc. to general note number 5 to read control of all light fixtures. Re: division 26.
d. Removed general note number 6.
e. Revise switch in workroom/breakroom B112 to be standard switch.
f. Relocated Wall pack on wall plan South of PRE-K B114 to above window plan West.
g. All D2 fixtures in collaboration space B111 shall have conduits and boxes serving these fixtures to be mounted within deck above.
h. All D1 fixtures under canopy shall have conduits and boxes serving these fixtures to be mounted within deck above.

Item No. 65 **Sheet EL – 201C – 1st LEVEL – LIGHTING PLAN – AREA C**

a. Added Bodine or equal to general note number 3 to read automatic transfer devices Bodine or equal for all light fixtures.
b. Removed general note number 4
c. Removed including but not limited to power packs, wiring, etc. to general note number 5 to read control of all light fixtures. Re: division 26.
d. Removed general note number 6.
e. Relocated Wall pack on wall plan West of Kindergarten C109 to above window plan South of Kindergarten C109.
f. Relocated Wall pack on wall plan East of First Grade C123 to above window plan West of First Grade C123.
g. All D2 fixtures in collaboration space C120 shall have conduits and boxes serving these fixtures to be mounted within deck above.
h. All D1 fixtures under canopy shall have conduits and boxes serving these fixtures to be mounted within deck above.
i. Revised OC switch in PASS C107
j. standard switch.
k. Revised OC switch in DBC C106 standard switch.
l. Revised OC switch in SRP C104 standard switch.
m. Revised OC switch in Speech Therapy C105 to standard switch.
n. Added emergency fixture to plan Southeast corner near storage room C102A of Innovation Lab C102.
o. Added emergency fixture to plan Northeast corner near storage room C101A of Innovation Lab C101.
p. Added ceiling mounted occupancy sensor in PASS C107.
q. Added ceiling mounted occupancy sensor in DBC C106.
r. Added ceiling mounted occupancy sensor in SRP C104.
s. Added ceiling mounted occupancy sensor in Speech Therapy C105.

Item No. 66 **Sheet EL – 201D – 1st LEVEL – LIGHTING PLAN – AREA D**

a. Added Bodine or equal to general note number 3 to read automatic transfer devices Bodine or equal for all light fixtures.
b. Removed general note number 4
c. Removed including but not limited to power packs, wiring, etc. to general note number 5 to read control of all light fixtures. Re: division 26.
d. Removed general note number 6.
e. Relocated Wall pack on wall plan East of First Grade D101 to above window plan East of First Grade D101.
f. Relocated Wall pack on wall plan East of Life Skills D110 to above window plan North of Life Skills D110.

g. Added emergency fixture to Teacher RR D113

Item No. 67 **Sheet EL – 201E – 1st LEVEL – LIGHTING PLAN – AREA E**

a. Added Bodine or equal to general note number 3 to read automatic transfer devices Bodine or equal for all light fixtures.
b. Removed general note number 4
c. Removed including but not limited to power packs, wiring, etc. to general note number 5 to read control of all light fixtures. Re: division 26.
d. Removed general note number 6.
e. All D2 fixtures in collaboration space E102 shall have conduits and boxes serving these fixtures to be mounted within deck above.
f. All D1 fixtures under canopy shall have conduits and boxes serving these fixtures to be mounted within deck above.
g. Added emergency fixture to plan Southwest J fixture in Collaboration Space E102.
h. Added wall pack and branch circuitry to above window plan West of Music E111.
i. Relocated wall pack to center of exterior wall plan North of Music E111.

Item No. 68 **Sheet EL – 201F – 1st LEVEL – LIGHTING PLAN – AREA F**

a. Added Bodine or equal to general note number 3 to read automatic transfer devices Bodine or equal for all light fixtures.
b. Removed general note number 4
c. Removed including but not limited to power packs, wiring, etc. to general note number 5 to read control of all light fixtures. Re: division 26.
d. Removed general note number 6.
e. Removed wall back and branch circuitry over door plan south of Chair Storage F102.
f. Added ceiling mounted occupancy sensor in Dry Storage F107.
g. Revised OC switch in Dry Storage F107 to standard.

Item No. 69 **Sheet EL – 201G – 1st LEVEL – LIGHTING PLAN – AREA G**

a. Added Bodine or equal to general note number 3 to read automatic transfer devices Bodine or equal for all light fixtures.
b. Removed general note number 4
c. Removed including but not limited to power packs, wiring, etc. to general note number 5 to read control of all light fixtures. Re: division 26.
d. Removed general note number 6.
e. Removed switches plan west of PE Office G105.
f. Revised fixture circuitry south of PE Office G105 to have exterior fixtures be on their own circuit and circuit the interior downlight to Gym G100 circuitry.
g. Relocate wall pack plan Northwest of PE Office G105 to plan West of Ramp G106.
h. Added keynote number 3 to stage area contractor shall price as alternate. Refer to architect for additional information.
i. Added junction box and branch circuitry to plan east wall of Stage G101 to power echo touch controller.
j. Added type C fixture to plan North side of Fire Riser RM G108.
k. Revised OC switch in PE Storage G109 to standard.
l. Added ceiling mounted occupancy sensor in PE Storage G109.
m. Revised OC switch in Storage G107 to standard.
n. Added ceiling mounted occupancy sensor in Storage G107.
o. Revised OC switch in Custodial Office/Storage G112 to standard.
p. Added ceiling mounted occupancy sensor in Custodial Office/Storage G112.
q. Added wall pack and branch circuitry to exterior wall plan North of Locker Room F100.

Item No. 70 **Sheet EL – 202B – 2nd LEVEL – LIGHTING PLAN – AREA B**

a. Added Bodine or equal to general note number 3 to read automatic transfer devices Bodine or equal for all light fixtures.
b. Removed general note number 4
c. Removed including but not limited to power packs, wiring, etc. to general note number 5 to read control of all light fixtures. Re: division 26.
d. Removed general note number 6.
e. Added emergency fixture to plan South J fixture in corridor B202.
f. Added note to P fixture above Learning Commons conduit and boxes are to be routed within the deck above in this space.

Item No. 71 **Sheet EL – 202C – 2nd LEVEL – LIGHTING PLAN – AREA C**

a. Added Bodine or equal to general note number 3 to read automatic transfer devices Bodine or equal for all light fixtures.
b. Removed general note number 4
c. Removed including but not limited to power packs, wiring, etc. to general note number 5 to read control of all light fixtures. Re: division 26.
d. Removed general note number 6.
e. Added emergency fixture to plan Southwest corner of Stair D.
f. Revised circuitry M fixture plan East of RR C223 to corridor.
g. Revised lighting fixtures in corridor D200 to D2.
h. Added emergency fixtures to plan Southwest lighting fixture in Innovation Lab C210.
i. Added emergency fixture to 2x4 closest to door in Storage C210A.
j. Added emergency fixture to 2x4 closest to door in Storage C201A.
k. Added emergency fixture to 2x4 closest to door in Motor Lab C216.
l. Added emergency fixture to 2x4 closest to door in Resource C206.
m. Added emergency fixture to 2x4 closest to door in SRP C205.
n. Added ceiling mounted occupancy sensor in SRP C205.
o. Revised OC switch in SRP C205 to standard switch.
p. Added ceiling mounted occupancy sensor in Resource C206.
q. Revised OC switch in Resource C206 to standard switch.

Item No. 72 **Sheet EL – 202C – 2nd LEVEL – LIGHTING PLAN – AREA C**

a. Added Bodine or equal to general note number 3 to read automatic transfer devices Bodine or equal for all light fixtures.
b. Removed general note number 4
c. Removed including but not limited to power packs, wiring, etc. to general note number 5 to read control of all light fixtures. Re: division 26.
d. Removed general note number 6.
e. Revised D switch in Teacher Workroom to standard switch.
f. Added emergency fixture to 2x4 closest to door in Speech Therapy.

Item No. 73 **Sheet EL – 202C – 2nd LEVEL – LIGHTING PLAN – AREA C**

a. Added Bodine or equal to general note number 3 to read automatic transfer devices Bodine or equal for all light fixtures.
b. Removed general note number 4
c. Removed including but not limited to power packs, wiring, etc. to general note number 5 to read control of all light fixtures. Re: division 26.
d. Removed general note number 6.
e. Revised emergency fixtures to have four pairs of emergency fixtures.

Item No. 74 **Sheet E – 301 – ELECTRICAL ROOF PLAN – COMPOSITE**

a. Keynote number 3 is not used.
b. Disconnect for HRU-A1-01 to be mounted inside of screen system without the need of a pedestal.
c. Disconnect and WP receptacle for ACCU-A1-01 to be mounted inside of screen system without the need of a pedestal.
d. Disconnect for ACCU-G1-02 to be mounted inside of screen system without the need of a pedestal.
e. Disconnect for ACCU-G1-02 to be mounted inside of screen system without the need of a pedestal.
f. Disconnect and WP receptacle for MAU-F1-01 to be mounted inside of screen system without the need of a pedestal.
g. Disconnect and WP receptacle for MAU-F1-02 to be mounted inside of screen system without the need of a pedestal.

Item No. 75 **Sheet E – 401 – ELECTRICAL KITCHEN PLAN**

a. Revised general notes and keyed notes. Refer to drawing.
b. Added Kronos clock and doorbell. Refer to drawing.
c. Revised location of electrical panels to be flush mounted into the wall. Refer to drawing.
d. Relocated the receptacles in office F108, receptacle on plan South wall to be moved to plan East wall. Receptacle on plan East wall to be moved to plan South wall. Refer to drawing.
e. Added two duplex receptacles and branch circuiting to power LCD. Refer to drawing.
f. Added a disconnect for disposer on plan North wall. Refer to drawing.
g. Added two switches for hood fan and light location. Refer to drawing.

Item No. 76 **Sheet E – 501 – ELECTRICAL ONE LINE DIAGRAM**

a. Keynote 12 not used.

Item No. 77 **Sheet E – 601 – ELECTRICAL SYMBOL LEGEND AND CONTACTOR SCHEDULE.**

a. Added note on S2 description “see note S2” on the lighting fixture schedule.
b. Added note on S1a description “see note S3” on the lighting fixture schedule.
c. Added note on X description “see note S1” on the lighting fixture schedule.
d. Revised Lighting fixture note S2 with RTSP25 to read Provide KW #RTSP25-DBZ-DM-BC pole.
e. Revised Lighting fixture note S2 with RTSP25 to read Provide KW #RTSP25-DBZ-DM-BC pole.

Item No. 78 **Sheet E – 601 – ELECTRICAL SYMBOL LEGEND AND CONTACTOR SCHEDULE.**

a. Removed detail, typical room wiring diagram.

Item No. 79 **Sheet P-101D – PLUMBING – 1ST LEVEL – FLOOR PLAN – AREA D**

a. Add 3/4”CW line to serve added HB-1 in RR D104. Add keynote #18 to read, “3/4” COLD WATER DOWN TO HOSE BIBB”.

Item No. 80 **Sheet P-101F – PLUMBING – 1ST LEVEL – FLOOR PLAN – AREA F**

a. Add 1”CW line w/ shut-off valve above GYM G100 to serve added RH-1.
b. Add 1”CW line w/ shut-off valve above KITCHEN F105 to serve added RH-1. Add keynote #14 to read, “1” COLD WATER UP TO NON-FREEZE ROOF HYDRANT”.
c. Add 3/4”CW line to serve added HB-1 in RR F104. Add keynote #15 to read, “3/4” COLD WATER DOWN TO HOSE BIBB”.

Item No. 81 **Sheet P-101G – PLUMBING – 1ST LEVEL – FLOOR PLAN – AREA G**

a. Add 1"CW line w/ shut-off valve above CORRIDOR F100 to serve added RH-1. Add keynote #18 to read, "1" COLD WATER UP TO NON-FREEZE ROOF HYDRANT".
b. Add 1"CW line w/ shut-off valve above GYM G100 to serve added RH-1. Add keynote #18 to read, "1" COLD WATER UP TO NON-FREEZE ROOF HYDRANT".
c. Add 3/4"CW line to serve added HB-1 in RR G102. Add keynote #19 to read, "3/4" COLD WATER DOWN TO HOSE BIBB".

Item No. 82 **Sheet P-102B – PLUMBING – 2ND LEVEL – FLOOR PLAN – AREA B**

a. Modify sprinkler pipe routing above LEARNING COMMONS B103. Modify sprinkler main penetration through plan north structural beam to be through center of beam, per structure drawing details.
b. Extend sprinkler main to penetrate through plan south structural beam to serve remainder of Area B as necessary.
c. Remove sprinkler branch penetration through plan north and plan south structural beams, sprinkle area above plan north/south stairs and area above LEARNING COMMONS with separate sprinkler branches to avoid additional structural beam penetration.

Item No. 83 **Sheet P-102C – PLUMBING – 2ND LEVEL – FLOOR PLAN – AREA C**

a. Add 3/4"CW line to serve added HB-1 in RR C223. Add keynote #14 to read, "3/4" COLD WATER DOWN TO HOSE BIBB".

Item No. 84 **Sheet P-102D – PLUMBING – 2ND LEVEL – FLOOR PLAN – AREA D**

a. Add 3/4"CW line to serve added HB-1 in RR D204. Add keynote #16 to read, "3/4" COLD WATER DOWN TO HOSE BIBB".

Item No. 85 **Sheet P-102E – PLUMBING – 2ND LEVEL – FLOOR PLAN – AREA E**

a. Modify sprinkler pipe routing above stairs plan north of LEARNING COMMONS B103. Modify sprinkler main penetration through structural beam to be through center of beam, per structure drawing details.
b. Remove sprinkler branch penetration through structural beam, sprinkle area above stairs and area above LEARNING COMMONS with separate sprinkler branches to avoid additional structural beam penetration.

Item No. 86 **Sheet P-301 – PLUMBING ROOF PLAN**

a. Add RH-1 above CORRIDOR F100, KITCHEN F105, and GYM G100.

Item No. 87 **Sheet P-501 – PLUMBING SCHEDULES**

a. Modify HB-1 entry in the PLUMBING FIXTURE SCHEDULE to include "PROVIDE AT STUDENT GANG RESTROOMS AS INDICATED" and "COORDINATE EXACT LOCATION WITH ARCHITECT PRIOR TO INSTALL" in the 'REMARKS' column.

Item No 88 **All T and TN sheets**

a. Category 6 should be used throughout the project except for Wireless Access Points (WAP), which will receive Category 6A cabling.
b. Clocks have been removed from all TN series sheets, clocks remain in T sheets.
c. Local Sound speakers have been removed from all classrooms per district standards.
d. Keyed note 28 in TN sheets changed from Allowance to Alternate 12.
e. Added technology symbols to legend.
f. Technology system keyed notes, note 3, data cabling shall be (2) CAT6 for the Building Automation System.
g. All T sheets, Added general note:
'The following intercom speakers should be designated as IP and shall receive an IP speaker and data cabling: All classrooms, Offices, Community/PTO, Maker Space, Sensory and

Resource. The remaining spaces should be circuited as common areas and zoned as follows: Corridors, (with all ancillary spaces, like restrooms, electrical, mechanical, IDF/MDF rooms, Storage rooms, etc.), Kitchen and associated spaces, cafeteria and associated spaces, Gym/Stage and associated spaces, Learning Commons and associated spaces, and exterior. Provide analog speakers and paging modules as required. All offices and special education classrooms shall receive a volume control'.

Item No 89 **Sheet T-000**

a. Technology Plan General Notes, changed items 22 – 26, 28 to CAT6 cable only.
b. Technology Plan General Notes, changed item 27 to CAT6 cable only.
c. Technology Legend, add note to AP, wall mounted AP shall be mounted at 12' A.F.F. and shall receive (1) CAT6 cable.
d. Technology Legend, updated ceiling mounted outlet note. Removed, "route (1) conduit from the building structure to a single gang box mounted at 5' or less above the finished ceiling".
e. Technology Legend, updated 'SP' note, "provide and install a raco 260 box with 2 gang mud ring at 60" A.F.F. with (1) 2" conduit stubbed out above nearest accessible ceiling and (1) CAT6 cable routed to nearest IDF. provide 1 data drop per SP. Provide all required termination hardware. electrical contractor shall provide a dedicated circuit. Owner furnished-contractor installed".
f. Technology Legend, updated 'LCD' note, (1) CAT6 cable.
g. Added 'Security General Notes' to sheet.

Item No 90 **Sheet T-000.1**

a. BDA / DAS General Notes, added note: Testing of the building shall be part of the base bid. If it's determined that the system is required, the system shall be designed and installed under the appropriate allowance.
b. Intercom system general notes, removed note 9.
c. Intercom/clock systems legend, updated Intercom speakers and wall mounted intercom speaker legends.

Item No 91 **Sheet TS101**

a. Added extra optic fiber service entry to the building.
b. Relocated the optic fiber service entry shown on CSP drawings to the front of the school.
c. Removed one 24x24x24 box near the building for the marquee conduit.
d. Updated note 12, "Contractor to provide and install (1) 1-1/2" conduit with (1) CAT6 shielded cable underground from building's MDF for the radio frequency identification system (RFID), **CarRider Pro**.
e. Updated note 14, The contractor shall provide and install POE, CAT6 cabling in (1) 1-1/2" conduit to each light pole indicated for security camera cable. Each pole shall receive its own conduit.
f. Added note 17 to keyed notes, "Indicates the location of the radio frequency identification system (RFID), **CarRider Pro** . Contractor to provide and install POE Panduit extender, transmitter model: poextx1 and receiver model: poexrx1, in conduit from MDF. Contractor to provide and install pedestal per manufacturer instructions.

Item No 92 **Sheet T-001**

a. Updated routing on Southeast plan to call for MDF A125.

Item No 93 **Sheet T-101A**

a. Technology System General Notes,
    i. Updated Note 1, 'The structured cabling contractor shall provide and install (1) category 6 data cable to each security camera location on plans. Refer to network systems plans for camera locations.
    ii. Updated Note 4, removed USB from note.

iii. Updated Note 8, 'All structured cabling shall have a 20-foot service loop at both ends and tied off to frame with approved cable support'.
iv. Removed Note 9.

b. Camera in main hallway in front of second set of double doors is a fixed camera.
c. Card reader in main hallway coming out of reception got moved to the inside of the reception area.
d. Camera in waiting area A102 is a multi-sensor camera.
e. Added D2 in waiting area A102 next to LCD.
f. Removed keyed note 21 and D1's from reception desk.
g. Added keyed note 29 for the installation of a junction box for future Aiphone master station on reception desk.
h. Added D1 in Breakroom area for printer.
i. Small conference room, D2 goes above counter, Added PS next to D2, floor drop changed from D4 to D2.
j. Added D2's in office A108, A111, Principal A112, registrar A117, and ARD A118.
k. Added D2 in electrical room A107 for BAS.
l. Added AP in clinic A103.
m. Moved Southwest plan hallway camera from to Southeast end of hallway. Moved Northeast plan hallway camera to Southeast plan. Moved Northwest hallway camera to Northeast plan. These 3 cameras are fixed.
n. Added a PS in Counselor A122.
o. Added exterior fixed camera outside of Counselor A122.
p. Camera in Corridor B100 is a multi-sensor camera.

Item No 94 **Sheet T-101B**

a. Added D2 in library workroom B107.
b. Added D1 next to PS in Learning Commons B103.
c. Added fixed camera in Collaboration B111 East hallway.
d. Added D2 in Workroom/Breakroom B112.
e. Moved PS and D3 from North wall plan east side to North Wall plan west side near teacher's desk in Pre-K B113.

Item No 95 **Sheet T-101C**

a. Added exterior multi-sensor camera in Southwest plan corner of First Grade C123.
b. Added exterior fixed camera outside Collaboration C120, South plan wall.
c. Kindergarten C109, added exterior multi-sensor camera in Southwest plan corner, deleted D2 and D1.
d. Stair C115, removed KP near perimeter double doors, added multi-sensor camera.
e. Kindergarten C111, deleted D2.
f. Added multi-sensor camera in hallway intersection near elevator.
g. Added fixed cam in Collaboration C120 south hallway.
h. Added D3 to the three desks in Pass C107.
i. Added (2) D3's to the two sets of three desks on each wall in DBC C106.
j. Changed D3's to D2's in Pass C107 and DBC C106.
k. Added D3 to the three desks in SRP C104.
l. Removed PS and D2 in Speech Therapy C105.

Item No 96 **Sheet T-101D**

a. Added exterior multi-sensor cameras to Northwest plan corner of First Grade D101 and Northwest plan corner of Life Skills D110.
b. Added fixed cam on hallway outside of storage D103.
c. Added multi-sensor cameras on hallway intersection outside of ECSC D107 and Stair E D106.

d. Added fixed camera in Corridor D112 near teacher RR D113.
e. Added PS to Resource D111 next to D2.
f. Added exterior fixed camera outside corridor D112 near exterior AP.

Item No 97 **Sheet T-101E**

a. Added fixed camera in Collaboration E102 East plan hallway, outside Second Grade E1103.
b. Added D1 in KILN E110B.

Item No 98 **Sheet T-101F**

a. Sound cabinets in gymnasium and cafeteria shall be connected so either could be the main and drive the other system.
b. Camera in Corridor F100 behind Chair Storage F102 is a multi-sensor camera.
c. Added D1 for sound cabinet in Chair Storage F102.
d. SP next to D3 in Cafeteria changed to PS.
e. Added exterior fixed camera outside west cafeteria double door.
f. Moved fixed camera located near perimeter southeast plan double door in cafeteria 7' west and added another fixed camera next to it to cover perimeter door and cafeteria.
g. Added AP in Kitchen F105 near coolers.
h. Added exterior multi-sensor camera in Southeast corner behind Dry Storage F107.
i. Added exterior AP outside of Cooler/Freezer F105A.

Item No 99 **Sheet T-101G**

a. Southwest plan camera in corridor F100 near Gym entrance is a multi-sensor camera.
b. Removed camera in corridor F100 outside of RR G103.
c. Added exterior multi-sensor camera outside of PE Office G105.
d. Removed D1's and keyed note 21 in PE Office G105.
e. Added AV in stage apron.
f. Added D1 to local sound rack in stage.
g. Northeast and Northwest plan corner outside stage added multi-sensor cameras.
h. Added door contact for roof hatch in Main Elec G110.
i. Added D2 for BAS in Boiler G111.
j. Added exterior fixed camera and exterior AP outside of Custodial Office Storage G112.
k. Added door contact for roof hatch in Storage G112A.
l. Added exterior fixed camera outside of Office F108 next to perimeter door.
m. Added multi-sensor camera on East side plan under canopy.

Item No 100 **Sheet T-102A** has been removed from set.

Item No 101 **Sheet T-102B**

a. Added fixed camera in Collaboration B203 West corridor.
b. Camera in Collaboration B203 outside of Fifth grade B206 in a fixed camera.

Item No 102 **Sheet T-102C**

a. Added fixed camera in Collaboration C228 South corridor.
b. Camera in Collaboration C228 outside of Fourth grade C230 in a fixed camera.
c. Hallway intersection near elevator, camera is a multi-sensor camera.
d. Added fixed camera in Collaboration B203 West corridor.
e. Camera in Collaboration B203 outside of Fifth grade C215 in a fixed camera.
f. Added a D2 for BAS in Elec C211.
g. Added (2) D2's in Computer Tech Storage C218.

h. Added D2 in Literacy Library C219, OT / PT C217, Assistant Principal C209, LSSP C208, Diag C207, AV Booth C203.

Item No 103 **Sheet T-102D**

a. Added fixed camera in Corridor D200 outside of Fourth Grade D203.
b. Hallway intersection near Speech Therapy D207 has a multi-sensor camera.
c. Added door contact to roof hatch in Storage D203.
d. Added D2's in teacher workroom D211., Math Coach D209, Literacy Coach D210, ESL D208.
e. Added D2 in Elec D213 for BAS.
f. Added LCD's in rooms Math Coach D209, Literacy Coach D210, ESl D208.
g. Fixed camera was added in Collaboration E202 West corridor, outside Teacher RR D215.

Item No 104 **Sheet T-102E**

a. Fixed camera was added in Collaboration E202 East corridor, near Third Grade E206.

Item No 105 **Sheet T102-F** has been removed from set.

Item No 106 **Sheet TF-001** has been removed from set.

Item No 107 **Sheet TF-002** has been removed from set.

Item No 108 **Sheet TF-101A**

a. Corridor A101, added fire alarm relay to rolling gate.
b. Added intercom speakers to Storage A128A, Storage A126.
c. Added an exterior speaker /strobe outside Storage A126.
d. Added smoke detectors to Elec A107, Vault/Test Storage A116.

Item No 109 **Sheet TF-101B**

a. Added 4 smoke detectors spaced in hallway between Kindergarten B118 – Kindergarten B115.
b. Added smoke detector in Workroom/ Breakroom B112

Item No 110 **Sheet TF-101C**

a. Added intercom speakers in Storage C102A, Storage C101A, Custodial C116.
b. Added smoke detectors in Storage C102A, Storage C101A.

Item No 111 **Sheet TF-101D**

a. Removed on duplicate smoke detector on hallway behind ECSC D107.
b. Added intercom speakers in Storage D103, Storage D110B, Storage D114.

Item No 112 Sheet TF-101E

a. Collaboration E102, speaker/strobes and intercom speakers shall be wall mounted, reference Collaboration C120.
b. Added 4 smoke detectors spaced in Collaboration E102 between Second Grade E109 – Second Grade E106.

Item No 113 **Sheet TF-101F**

a. Added intercom speaker in Chair Storage F102.
b. Cafeteria F101, turned off local speakers, these are shown on TN sheets.
c. Cafeteria F101, added 8 smoke detectors spaces in whole area.
d. Provide relays for Ansul system kitchen hoods in Kitchen F105.

Item No 114 **Sheet TF-101G**

a. Added intercom speakers in PE Storage G109, Main Elec G110, Boiler G111.

Item No 115 **Sheet TF-102A** has been removed from set.

Item No 116 **Sheet TF-102C**

a. Added intercom speaker in Storage C214, Storage C201A, Storage C210A.
b. Remove duplicate intercom speakers from Literacy Library C219, Teacher RR C213, SRP C205, Resource C206, Diag C207, LSSP C208, Broadcast Studio C202, Innovation Lab C210, Innovation Lab C201.

Item No 117 **Sheet TF-102D**

a. Added intercom speakers in Storage D203, Storage D216.

Item No 118 **Sheet TF-102F** has been removed from set.

Item No 119 **Sheet TN-501**

a. Removed note 9 and 16 from Enlarged MDF/IDF keyed notes.
b. Note 11 has been updated to CAT6 from Enlarged MDF/IDF keyed notes.
c. Provide D2 for each of the following in the MDF room: Fire Alarm panel, Intrusion Panel, Access Control panel, and Intercom Head-end.

Item No 120 **Sheet TN-502**

a. Add general note that says: Provide laminated map in each MDF/IDF showing cables served per district standards.
b. Updated keyed note 6 to show 12 strands from MDF/IDF Enlarged Elevation keyed notes.

Attachments include 64 additional sheets and ends with drawing P-102E dated 01/12/2022

REGISTERED ARCHITECT
MELISSA TURNBAUGH
21779
STATE OF TEXAS

Melissa Turnbaugh

Jan 13, 2022

STATE OF TEXAS
JOHN R. KUBALA
106120
LICENSED
PROFESSIONAL ENGINEER

01/12/2022

Kubala Engineers
F-3709

STATE OF TEXAS
DONALD C. RICHARDS
61525
LICENSED
PROFESSIONAL ENGINEER

CLINE ELEMENTARY SCHOOL REPLACEMENT

CSP #22-002

PRE-CONFERENCE MEETING

SIGN IN SHEET

THURSDAY, JANUARY 13, 2022 AT 10:00AM

NAME (PLEASE PRINT)	COMPANY	EMAIL ADDRESS	PHONE NUMBER
Jason Traylor	Traylor Mechanical		
Tyler Mules	Penhall Company		
Ben Weibel	Brookstone Construction		
John Somogye	BLTI		
Nicholas	Altius Graphics		
Darryl Vernon	Paradigm Construction		
Joel Mancille	Marlin Construction		
Leslie Lagunas	S&P		
Jeff Teetz	TRICO Mechanical		
Carter Ullrich	Purcell Construction		
Sean Bowman	Alpha Testing		
B. Calanes	D1 Construction		
Travis Cole	Gurry Mechanical		
Brad Anderson	Northstar Fire		
James Dole	Champion Landscape		
Barclay Pittman	S&P		

Brandon Walson	D1 Construction		
Dustin Forward	Traylor Mechanical		
David Walker	Comex Corp		
Joshua Morales	NCS		
Siddhartha Nayak	Altius Graphics		
Anthony Medrono	Marlin Construction		
Richard Poe	ICI Construction Inc		
Jeremy Fenton	S&P		
DJ Bruner	Accutek Tech		
Sandy Spencer	NCS		
Javier Cordova	All Campus Security		
Bobby Truchard	Drymalla		
Stephanie Northcutt	ALC		
John Marshall	S&P		

DOCUMENT 00 40 12 - LIST OF SUBCONTRACTORS

PROJECT:
Cline Elementary School Campus Replacement

ARCHITECT:
PBK
11 Greenway Plaza, 22nd Floor
Houston, Texas 77046

ARCHITECT'S PROJECT NO. 20380

TO: [Contractor Name]
[Street}
[City, State Zip]

DATE:_____

List Subcontractors and others proposed to be employed on the above Project as required by the proposal documents.
(To be filled out by the Contractor and returned to the Architect.)

Work/ Division	Firm	Address	Phone	Fax	e-mail	Representative

(Provide additional sheets as required.)

END OF DOCUMENT 00 40 12

NOTE: THIS DOCUMENT MUST BE EXECUTED AND SUBMITTED WITH ALTERNATE PROPOSAL.

▲1 SECTION 08 91 00 - FIXED LOUVERS

PART 1 - GENERAL

1.1 RELATED DOCUMENTS

A. Drawings and general provisions of the Contract, including General and Supplementary Conditions and other Division 01 Specification Sections, apply to this Section.

1.2 SUMMARY

A. Section Includes: Requirements including but not limited to:
   1. Fixed, extruded aluminum and formed metal louvers.
   2. Accessories necessary for a complete installation.

1.3 DEFINITIONS

A. Louver Terminology: Definitions of terms for metal louvers contained in AMCA 501 apply to this Section unless otherwise defined in this Section or in referenced standards.

B. Horizontal Louver: Louver with horizontal blades (i.e., the axes of the blades are horizontal).

C. Drainable Blade Louver: Louver with blades having gutters that collect water and drain it to channels in jambs and mullions, which carry it to bottom of unit and away from opening.

D. Wind Driven Rain Resistant Louver: Louver that provides specified wind driven rain performance determined by testing according to AMCA 500-L.

1.4 SUBMITTALS

A. Product Data: Technical data for each type of product indicated. For louvers specified to bear AMCA seal, include printed catalog pages showing specified models with appropriate AMCA Certified Ratings Seals.

B. Shop Drawings: For louvers and accessories. Include plans, elevations, sections, details, and attachments to other Work. Show frame profiles and blade profiles, angles, and spacing.
   1. Show weep paths, gaskets, flashing, sealant, and other means of preventing water intrusion.
   2. Show mullion profiles and locations.
   3. Windstorm: Design loads as indicated on drawings.

C. Samples: Submit for units with factory applied color finishes.

1.5 QUALITY ASSURANCE

A. Delegated Design Submittal: For louvers indicated to comply with structural [**and seismic**] performance requirements, including analysis data signed and sealed by the qualified professional engineer responsible for their preparation.

B. Product Test Reports: Based on evaluation of comprehensive tests performed according to AMCA 500-L by a qualified testing agency or by manufacturer and witnessed by a qualified testing agency, for each type of louver and showing compliance with performance requirements specified.

C. Windborne debris impact resistance test reports.

D. Regulatory Requirements:
   1. SMACNA Standard: Comply with recommendations in SMACNA *Architectural Sheet Metal Manual* for fabrication, construction details, and installation procedures.
   2. Welding: Qualify procedures and personnel according to the following:
      a. AWS D1.2/D1.2M Structural Welding Code - Aluminum.

E. Source Limitations: Obtain louvers and vents from single source from a single manufacturer where indicated to be of same type, design, or factory applied color finish.

1.6 FIELD CONDITIONS

A. Field Measurements: Verify actual dimensions of openings by field measurements before fabrication.

1.7 WARRANTY

A. Warrant the work specified herein for 20 years against becoming unserviceable or causing an objectionable appearance resulting from either defective or nonconforming materials and workmanship.

B. Defects shall include, but not be limited to:
   1. Fading, corrosion, or other finish deterioration.

PART 2 - PRODUCTS

2.1 MATERIALS

A. Aluminum Extrusions: ASTM B 221 (ASTM B 221M), Alloy 6063-T5, T-52, or T6.

B. Aluminum Sheet: ASTM B 209 (ASTM B 209M), Alloy 3003 or 5005 with temper as required for forming, or as otherwise recommended by metal producer for required finish.

C. Galvanized Steel Sheet: ASTM A 653/A 653M, G90 (Z275) zinc coating, mill phosphatized.

D. Stainless Steel Sheet: ASTM A 240/A 240M, Type 304, No. 4 finish, with grain running parallel to length of blades and frame members..

E. Fasteners: Use types and sizes to suit unit installation conditions.
   1. Use tamper resistant screws for exposed fasteners unless otherwise indicated.
   2. For fastening aluminum, use aluminum or 300 series stainless-steel fasteners.
   3. For fastening galvanized steel, use hot dip galvanized steel or 300 series stainless steel fasteners.
   4. For fastening stainless steel, use 300 series stainless-steel fasteners.
   5. For color finished louvers, use fasteners with heads that match color of louvers.

F. Postinstalled Fasteners for Concrete and Masonry: Torque controlled expansion anchors, made from stainless-steel components, with capability to sustain, without failure, a load equal to 4 times the loads imposed, for concrete, or 6 times the load imposed for masonry, as determined by testing according to ASTM E 488, conducted by a qualified independent testing agency.

G. Bituminous Paint: Cold-applied asphalt emulsion complying with ASTM D 1187.

2.2 FIXED, EXTRUDED ALUMINUM LOUVERS

A. Fabrication:

1. Design: Stationary drainable louver type with drain gutters in each blade and head with downspouts in jambs and mullions with all welded construction. Hidden vertical supports to allow continuous line appearance up to 120 inches (3,048 mm). Steeply angled integral sill.
2. Frame:
   a. Frame Depth: 6 inches (152 mm).
   b. Wall Thickness: 0.081 inch (2.1 mm), nominal.
   c. Material: Extruded aluminum, Alloy 6063-T6.

3. Blades:
   a. Style: Drainable. 35 degrees at 4 inches (102 mm), nominal.
   b. Wall Thickness: 0.094 inch (2.39 mm), nominal.
   c. Material: Extruded aluminum, Alloy 6063-T6.

4. Minimum Assembly Size: 12 inches wide by 12 inches high (305 mm x 305 mm).
5. Maximum Factory Assembly Size: Single sections shall not exceed 120 inches wide by 90 inches high (3048 mm x 2286 mm) or 90 inches wide by 120 inches high (2286 mm x 3048). Louvers larger than the maximum single size shall be require field assembly of smaller sections.
6. Recycled Content: 18% post-consumer. 55% pre-consumer, post-industrial. 73% total by weight.

B. Performance Data:
1. Based on testing 48 inch x 48 inch (1,219 mm x 1,219 mm) size unit in accordance with AMCA 500.
2. Free Area: 62 percent, nominal.
3. Free Area Size: 9.28 square feet (0.86 m^2).
4. Maximum Recommended Air Flow through Free Area: 1250 feet per minute (6.35 m/s).
5. Air Flow: 11600 cubic feet per minute (5.47 m^3/s).
6. Maximum Pressure Drop (Intake): 0.15 inches w.g. (0.035 kPa).
7. Water Penetration: Maximum of 0.01 ounces per square foot (3.1 g/m2) of free area at an air flow of 1250 feet per minute (6.35 m/s) free area velocity when tested for 15 minutes.

2.3 ACCESSORIES

C. Aluminum Blank-Off Panels: 0.040 inch (1 mm) aluminum sheet, factory installed with removable screws and neoprene gaskets.

D. Aluminum Insulated Blank-Off Panels: 1 inch (25 mm) and 2 inches (51 mm) as scheduled or indicated, aluminum skin, insulated core, factory installed with removable screws and neoprene gaskets.

E. Hinged Frame: Continuous piano hinge attached to angle subframe.

F. Front Security Bars:
1. Aluminum, 3/4 inch by 1/2 inch (19 mm by 13 mm).

G. Rear Security Bars:
1. Aluminum, 3/4 inch x 1/2 inch (19 mm x 13 mm), welded to louver.

H. Aluminum Filter Racks: Formed channel racks to accept standard 1 inch (25 mm) thick filters.
1. Unused bottom portion blanked off with 0.040 inch (1 mm) aluminum sheet.

I. Aluminum Filter Racks: Formed channel racks to accept standard 2 inch (51 mm) thick filters. Unused bottom portion blanked off with 0.040 inch (1 mm) aluminum sheet.

J. Extended Sills:
   1. Formed aluminum, Alloy 3003. Minimum nominal thickness 0.081 inch (2.1 mm).
   2. Extruded aluminum, Alloy 6063-T6. Minimum nominal thickness 0.060 inch (1.5 mm).

2.4 FABRICATION

A. Finish: 70 percent PVDF: Finish shall be applied at 1.2 mil total dry film thickness.
   1. Coating shall conform to AAMA 2605. Apply coating following cleaning and pretreatment. Cleaning: AA-C12C42R1X.
      a. Standard 2-coat.
      b. Color: Architect to select from manufacturer's full range of colors.

   2. 20-year finish warranty.

B. Finish: Prime Coat:
   1. Apply alkyd prime coat following chemical cleaning and pretreatment.
   2. Primer preparation for field painting.

PART 3 - EXECUTION

3.1 EXAMINATION

A. Examine substrates and openings, with Installer present, for compliance with requirements for installation tolerances and other conditions affecting performance of the Work.

B. Proceed with installation after correcting unsatisfactory conditions.

3.2 PREPARATION

A. Coordinate setting drawings, diagrams, templates, instructions, and directions for installation of anchorages that are to be embedded in concrete or masonry construction. Coordinate delivery of such items to Project site.

3.3 INSTALLATION

A. Locate and place louvers level, plumb, and at indicated alignment with adjacent Work.

B. Use concealed anchorages where possible. Provide brass or lead washers fitted to screws where required to protect metal surfaces and to make a weathertight connection.

C. Form closely fitted joints with exposed connections accurately located and secured.

D. Provide perimeter reveals and openings of uniform width for sealants and joint fillers, as indicated.

E. Repair finishes damaged by cutting, welding, soldering, and grinding. Restore finishes so no evidence remains of corrective Work. Return items that cannot be refinished in the field to the factory, make required alterations, and refinish entire unit or provide new units.

F. Protect unpainted galvanized and nonferrous-metal surfaces that are in contact with concrete, masonry, or dissimilar metals from corrosion and galvanic action by applying a heavy coating of bituminous paint or by separating surfaces with waterproof gaskets or nonmetallic flashing.

G. Install concealed gaskets, flashings, joint fillers, and insulation as louver installation progresses, where weathertight louver joints are required. Comply with Section 07 92 00 for sealants applied during louver installation.

3.4 ADJUSTING AND CLEANING

A. Clean exposed louver surfaces that are not protected by temporary covering, to remove fingerprints and soil during construction period. Do not let soil accumulate during construction period.

B. Before final inspection, clean exposed surfaces with water and a mild soap or detergent not harmful to finishes. Thoroughly rinse surfaces and dry.

C. Restore louvers damaged during installation and construction so no evidence remains of corrective Work. If results of restoration are unsuccessful, as determined by Architect, remove damaged units and replace with new units.
   1. Touch up minor abrasions in finishes with air dried coating that matches color and gloss of, and is compatible with, factory applied finish coating.

END OF SECTION 08 91 00

▲1 SECTION 05 34 00 - ACOUSTICAL METAL DECKING

PART 1 - GENERAL

1.1 SUMMARY

A. The requirements of this specification section include all materials, equipment, and labor necessary to furnish and install long-span acoustical roof deck.

1.2 RELATED WORK

A. Structural Steel: Supplementary framing.

B. Roofing: Other than structural roof deck and accessories.

C. Painting: Preparation for and application of field painting.

D. Mechanical: Attachments to Long-span acoustical roof deck.

E. Electrical: Attachments to Long-span acoustical roof deck.

1.3 SUBMITTALS

A. The manufacturer's specifications, section properties, load tables, diaphragm shear tables, dimensions, finishes, and noise reduction coefficients shall be submitted.

B. Shop drawings shall be submitted showing panel placement, profiles, material thicknesses, finishes, layout, anchorage and openings as dimensioned on the structural drawings.

C. A full width sample shall be submitted as requested to verify compliance with the specifications and the level of quality.

1.4 REFERENCE STANDARDS

A. Section properties shall be computed in accordance with the American Iron and Steel Institute (AISI) Specification for Design of Cold-Formed Steel Structural Members.

B. Welding shall comply with the applicable provisions of the American Welding Society (AWS) D1.3 Structural Welding Code-Sheet Steel.

C. Superimposed load and diaphragm shear capacities shall be computed in accordance with the requirements of the Steel Deck Institute (SDI).

D. The manufacturer shall have been regularly engaged in the production of roof deck and ceiling systems of the specified type with all of the required features for a period of at least ten years.

E. Noise reduction coefficients shall be verified by the result of sound absorption tests conducted in accordance with ASTM C423 and E795.

1.5 DELIVERY, STORAGE, AND HANDLING

A. The long-span acoustical roof deck shall be protected from damage during delivery, storage, and handling.

B. If storage at the jobsite is required, Long-span acoustical roof deck shall be elevated above the ground, sloped to provide drainage, and protected from the weather with a ventilated covering.

1.6 COORDINATION

A. Coordinate the fastener length for attaching roofing and thermal insulation to avoid penetrating the finished bottom surface of the long-span acoustical roof deck.

PART 2 - PRODUCTS

2.1.1 MANUFACTURER

A. In accordance with the requirements of this specification section, basis of design is Envista FA, Timberlok by Epic Metals Corporation or comparable product approved by Architect.

B. Other manufacturers seeking approval must submit; full size sample, Windguard test report, and product literature to Architect 21 days before original bid date. Approval shall be by written addenda.

C. Long-span acoustical roof deck; width, design depth, gauges and NRC shall be shown on the structural design drawings.

2.2 MATERIAL

A. The long-span acoustical roof deck shall be cold-formed from steel coils conforming to ASTM A653, structural quality, with a minimum yield strength of 40 ksi.

B. Before forming, the steel coils shall have received a hot-dip protective coating of zinc conforming to ASTM A924, Class G90, as defined in ASTM A653.

B. The minimum uncoated thickness of the steel furnished shall not be less than 95% of the design thickness.

C. Color: Colony Maple.

2.3 FABRICATION

A. ~~Long-span acoustical roof deck shall be cold-formed by the continuous roll forming process and resistance-welded together to form an integral cellular unit sixteen (16) inches in modular width.~~
   1. ~~Long-span acoustical roof deck shall have interlocking sidelaps that present a linear appearance from the underside, with narrow gaps between deck sheets approximately 1.5" wide.~~
   2. ~~Long-span acoustical roof deck shall have roll-formed embossments located between the longitudinal stiffening ribs in the top flanges and horizontal stiffening ribs along the vertical webs to enhance the structural performance.~~
   3. ~~Shallow stiffening ribs plus minor pencil ribs shall be roll-formed into the bottom plates of long-span acoustical roof deck. The ribs shall be located in the area between the webs to enhance flatness of the bottom plate. The use of break-formed components and / or pencil ribs only shall not be acceptable.~~
   4. ~~For long-span acoustical roof deck, the bottom plates in the area located between the webs shall be perforated for enhanced acoustic performance with uniform rows of holes. Individual acoustic elements shall be provided for the cells of the panels. These shall be factory installed, restrained from further movement during shipping or conditions at site using Windguard and tested in winds exceeding 60 mph. Copy of Windguard test report shall be available to Architect, or manufacturer shall provide Certified Letter attesting that test was conducted and compliance with performance herein. The acoustic elements shall be~~

~~supported above the bottom plate by either individual push pins or continuous mesh to avoid plugging the perforations when field painting. A minimum NRC value of 0.85 shall be provided. The value shall be established by sound absorption tests without the use of fiberglass insulation above the panels.~~

~~5. After forming and welding, to insure all exposed welds are coated, the bottom surfaces of long-span acoustical roof deck shall be prime painted with Epic's standard white color at the factory. Before factory painting, the exposed galvanized steel panel shall be chemically cleaned, receive an acid wash pretreatment, followed by a coat of Epic's standard white primer, and oven baked, including coverage of all factory welds. Compatibility of the field applied finish paint with the factory applied prime paint shall be the responsibility of the painting contractor. Painting or priming before factory welding of deck components is not acceptable. Painting so as to leave factory welds on bottom surface of deck exposed or having different color / appearance than surrounding deck steel shall not be accepted.~~

~~6. Where deck is inside building envelope, plate shall be acoustical (perforated), deck plate outside building envelope shall be non-acoustical (non-perforated), incorporating this change at end of cantilevers as necessary. Where deck panels are parallel to building envelope, deck manufacturer shall fabricate plate such that there is no direct metal to metal contact between acoustical plate indoors and non-acoustical portion outdoors, even if such fabrication is out-of-module. All such work shall be factory prepared.~~

~~7. Where deck is transverse to building envelope, deck manufacturer shall provide air dams where shown on Architectural design drawings. Where deck panels are parallel to building envelope, deck manufacturer shall provide air dams at building envelope. Air dam components inside cell of deck shall be factory installed, air dam components between cells of deck shall be field installed.~~

~~8. Access cover plate must be provided, supplied by deck manufacturer for electrical conduit running within the deck. Additionally, manufacturer to provide shop-installed cover plate over the electrical conduit fun on the top of the deck.~~

A. Long-span acoustical roof deck shall be cold-formed by the continuous roll forming process and factory assembled together to form integral cellular units eighteen inches (18”) in modular width. Single cell / cavity width shall not be less than approximately 15” on account that utilities may be placed inside deck in future. Break-formed deck components shall not be permitted. Bottom exposed portion of panels (“plate”) shall be attached to structural component of same panel (channel portion) without the use of welds or exposed mechanical means. Welds on exposed surface of deck shall not be permitted.

1. Long-span roof deck shall have interlocking and vertically self-aligning dovetail sidelaps that present a flush appearance with tight fitting joints from the underside, whereby sidelap fasteners are driven from above, normal to deck surface, and concealed within joinery. Button-punch or welded sidelaps shall not be permitted. Deck shall be attached to structural components using mechanical means as determined by EOR.
2. Long-span roof deck shall have transverse roll-formed embossments located between the longitudinal stiffening ribs in the top flanges.
3. Shallow stiffening ribs shall be roll-formed into the bottom plates of Long-span roof deck. The ribs shall be located in the area between the webs to enhance flatness of the bottom plate.
4. Where deck is inside of building envelope, Long-span roof deck’s bottom plate shall be perforated for enhanced acoustic performance with uniform rows of holes. Acoustic elements shall be of formaldehyde-free composition, factory installed, and factory secured by Windgard. A minimum NRC value for panel assembly with bare acoustical material shall be 0.95. The value shall be established by sound absorption tests without the use of fiberglass insulation above the panels. Where given deck panel is both inside and outside of building envelope such as cantilever condition, only portion of deck inside shall have acoustical preparation, panel shall transition from perforated to non-perforated at building envelope. Factory installed air dams shall be provided by deck manufacturer along perimeter of building envelope.

5. Where electrical or low-voltage field contracting trades must place conduit or wire inside deck per design documents, field trades shall locate and professionally cut small hole in bottom of deck soffit component. Edge of hole shall not be closer than two inches (2") from panel joinery. It is recommended that hole diameter not exceed four inches (4"), and not be closer than five feet (5') to next field cut hole. Field trade cutting hole shall furnish and install escutcheon or similar architectural plate suitable to cover hole. It is recommended that conduit shall be of flexible type.
6. After components are fabricated, bottom exposed surface shall receive primer finish, thereafter Timberlok finish coating to be applied – color shall be Colony Maple. Protective packaging shall be applied in factory to minimize abrasion during shipping.

2.4 ACCESSORIES

A. The manufacturer's standard ridge plates, valley plates, transition plates, and closures shall be provided as indicated on the structural drawings.

B. Openings and reinforcement for openings noted specifically by the deck manufacturer on the structural drawings shall be provided.

PART 3 - EXECUTION

3.1 GENERAL

A. Long-span acoustical roof deck shall be installed in strict accordance with the manufacturer's instructions, approved erection drawings, and all applicable safety regulations.

3.2 BEFORE INSTALLATION

A. The supporting frame and other work relating to the Long-span acoustical roof deck shall be examined to determine if this work has been properly completed.

B. Bundles of material shall be located on the supporting frame in such a manner that overloading of any individual framing members does not occur.

C. All components of the long-span acoustical roof deck shall be protected from significant damage during shipment and handling. If storage at the jobsite is required, bundles or packages of these materials shall be elevated above the ground, sloped to provide drainage, and protected from the elements with a ventilated, waterproof covering.

3.3 INSTALLATION

A. Before being permanently fastened, long-span acoustical roof deck shall be placed on the supporting frame and adjusted to final position with ends accurately aligned and adequately bearing on the supporting frame. Consistent coverage shall be maintained so that panels located in adjacent bays will be properly aligned.

B. Cutting of long-span acoustical roof deck to suit jobsite conditions shall be performed in a neat and professional manner. Only those openings indicated on the structural drawings shall be cut. Other openings shall be cut and reinforced by those requiring the openings as approved by the structural engineer.

C. The long-span acoustical roof deck shall be fastened to all supporting members with two ~~3/4" diameter puddle welds per 16" wide~~ powder actuated pins or screw fasteners per 18 inch wide panel or as indicated on the manufacturer's erection drawings.
   1. The sides of long-span acoustical roof deck located at the perimeter of the building shall be fastened to supporting members with ~~3/4" diameter puddle welds~~ power actuated pins or

screw fasteners at a maximum spacing of 36" on center or less as indicated on the manufacturer's erection drawings.

D. The sidelaps of Long-span acoustical roof deck shall be fastened together with 3/8” x 1” long seam weld or with No. 12 screws at a maximum spacing of 36" on center or less as indicated on the manufacturer's erection drawings.

E. Construction loads shall not be applied to long-span acoustical roof deck until after the panels are permanently fastened to supporting members, and sidelaps are attached. The construction loads shall not exceed the capacity of the panels.

F. Items such as ceilings, light fixtures, conduit, pipe and ductwork shall not be suspended from long-span acoustical roof deck without specific approval of the structural engineer.

G. Sump pans, ridge plates, valley plates, transition plates, eave plates, and supplied reinforcement for small openings shall be fastened as indicated on the manufacturer's erection drawings.

3.4 AFTER INSTALLATION

A. Construction loads that could damage the long-span acoustical roof deck such as heavy concentrated loads and impact loads shall be avoided. Planking shall be used in all high traffic areas.

B. Galvanizing and other coatings that are damaged must be field repaired using appropriate methods and shall be the responsibility of the contractor.

C. Cleaning the bottom surface of the long-span acoustical roof deck for field painting shall be the responsibility of the Contractor.

END OF SECTION 05 34 00

SECTION 27 51 23.41 - LOCAL SOUND DISTRIBUTION SYSTEM

PART 1 – GENERAL

1.1 RELATED DOCUMENTS

A. Drawings and general provisions of the Contract, including General and Supplementary Conditions and other Division 01 Specification Sections, apply to this Section.

1.2 RELATED WORK

A. 26 05 00 – Grounding and Bonding

B. 26 05 29 – Electrical Hangers and Supports

C. 26 05 33 – Raceway and Boxes

1.3 GENERAL REQUIREMENTS

A. Provide all equipment specified well as all miscellaneous parts and materials required for the proper, complete, and fully functional Local Sound Distribution System at the following Venues:
   1. Cafeteria
   2. Gym / Amphitheater
   3. Learning Commons

B. All applicable equipment shall bear the UL label.

C. Governing Codes and Conflicts: If the requirements of these specifications or the Project Drawings exceed those of the governing codes and regulations, then the requirements of these specifications and the Drawings shall govern. However, nothing in the Drawings or Specifications shall be construed to permit work not conforming to all governing codes, regulations, and manufacturer installation requirements.

D. Locate equipment to accommodate millwork, fixtures, marker boards and other room equipment at no additional cost to the owner.

E. Plenum rated cable may be used as an option at the contractor's discretion. Wherever cabling is run exposed, conduit shall be used to cover and protect wiring.

F. Integrate the local sound reinforcement system with connectivity to the following systems:
   1. Building wide public address communications system. Contractor to provide, install and terminate required cabling and devices for proper integration with the building wide public address system. The independent functionality of the building wide public address system is not the responsibility of the Contractor.
   2. Local Area and District Wide Network. Data drop by Technology cabling contractor for the purpose of connectivity of the Local Sound Systems with the Building Network.
   3. School fire alarm system for the purpose of Fire Alarm override of Local Sound Systems. Fire alarm module and cabling by Fire Alarm Contractor.

G. Should there be any discrepancy between these Specifications and the Construction Drawings, the greater quantity and / or quality of devices and design intent shall take precedent.

1.4 CONTRACTOR QUALIFICATIONS

A. The installing contractor shall be the authorized representative of the local sound distribution system to sell, install, and service the proposed manufacturer's equipment. The installing contractor shall have represented the manufacturer's product for at least four (4) years.

B. The installing contractor shall provide 24 hour, 365 days per year emergency service with factory trained, state licensed service technicians.

C. **The installing contractor must have a permanent office within a 75-mile radius of the project site and be an approved dealer/integrator, of the proposed system, in the nearest major metropolitan area.**

D. The installing contractor shall have been actively engaged in the business of selling, installing, and servicing systems in the surrounding area for at least ten (10) years.

E. The Contractor's installation team shall have at least one member possessing a NICET Level II, CTS-I or C-EST certification; additionally, at least one audio DSP programmer certified in HiQnet Audio Architect, Symetrix, Biamp Tisera, QSC or Dante.

F. Contractor shall have been in the commercial AVL (Audio, Video, Lighting) installation industry for at least five years. Contractor shall have installed at least five systems of this type and comparable scale in educational facilities within the State of Texas. Contractor shall provide a list of successfully completed projects including completion dates within the past two years from the bid date of this project.

G. Should the local sound systems include Crestron or AMX hardware which requires programming, the Contractor shall provide a Certified Crestron Programmer or an AMX Certified Expert (ACE) Programmer to program, upload and debug the third party control systems.

H. All individuals installing the local sound distribution system must be employees of the proposing/installing entity and at least 25% of the installing staff shall have undergone a training class covering the installation and programming of local sound distribution systems. Current certification indicating the successful completion of the training course shall be available upon request at the project and submitted in the contractor's product submittals.

I. The entity providing pricing to furnish and install the system specified within this specification section and the physical installing entity of this system shall be one in the same. Absolutely no subcontracting on any portion of this system, by the system's proposing entity, will be allowed.

J. Acceptable manufacturers:
   1. Reference Part 2 of this specifications for manufactures as specified. No other manufacturers will be accepted without submitting a formal request within no less than ten (10) day prior to the proposal date and if not officially approved via pre-proposal addendum.

1.5 SUBMITTALS

A. Product Data:
   1. Within fourteen (14) days of Notice to Proceed, the system installer shall furnish

the following in a single consolidated submittal:

a. Permits: The Contractor shall obtain all required permits and provide copies to the Owner/Architect/Engineer.

b. Product Literature: Complete manufacturer's product literature for all cable, termination components, cable supports, cable labels, field devices, and other products to be used in the installation. In addition, whenever substitutions for recommended products are made, samples (when requested by the Owner/Designer) and the manufacturer's supporting documentation demonstrating compatibility with other related products shall be included. The submittal shall have some type of distinguishing marker or pointer to indicated what specific product is to be provided

c. Construction Schedule: A time-scaled Construction Schedule, using PERT/CPM, indicating general project deadlines and specific dates relating to the installation of the cable distribution system.

d. Testing: Proposed Contractor system test result forms and a list of instrumentation to be used for systems testing.

e. Specification Compliance: A letter shall be provided stating, by section and subsection, that the system installer complies with the ENTIRE specification section. If the installer intends to deviate from any portion of the specifications, a detailed explanation of reason in which the installer would like to deviate shall be provided in addition to the specification compliance letter. NO DEVIATIONS SHALL BE ACCEPTABLE UNTIL THEY HAVE BEEN ACCEPTED BY THE PROJECT'S TECHNOLOGY CONSULTANT.

f. **Certifications: The contractor shall submit all of the following certifications and the certifications must contain dates which are valid from the date of proposal and not expirer any sooner than 12 months after substantial completion of the project.**

1) **Manufacturer's Authorized Dealer/Installer Certification as they apply to any portion of this specification: This certification must be held by the proposing/installing contractor and state that the proposing/installing contractor is and authorized dealer/installer of the system specified within the project specifications. The certification must have been obtained by the office that is within a 75 mile radius of the project's location.**

2) **Installer Certification: This certification must be held by at least 25% of the, on-site, staff and be made available at the site if requested by the owner, architect, and/or project's technology consultant.**

3) **Licenses: This includes all licenses required by the state in which the work is being performed, the federal government, local authorities having jurisdiction, and any organization in that governs the specific system**

B. Shop Drawings:

1. Submit the following items, for Owner review and approval, within twenty-eight (28) days of notice to proceed:

a. Proposed circuit routing and circuit grouping plan prepared by a system registered designer. The designer's certification must be current. Identifiable, separate routing shall be shown for both the station cabling and any backbone trunk cabling.

b. In addition to the cable routing, the submitted drawings shall indicate the following, even if the following is expected to be provided by the project's electrical or general contractor:

1) Location of all control equipment and remote power sources
2) Locations of all field devices and outlets
3) Location of wall penetrations (all penetrations shall be sleeved and contain protective bushings at both ends)
4) Location of sleeved wall pass-thru
5) Size of sleeve at each location installed
6) Quantity of cable passing through each sleeve
7) Location of drops in each room (quantity or labeling of drops are not required in the submittal plans. Labeling shall be provided in the closeout plans and quantities shall be as per the contract documents, addendums, and issued changes. Each drop shall be labeled for the type of outlet that it is)
8) Conduit routing, size, quantity, and stub-up locations for all floor mounted outlets.

c. Specification/Drawing Compliance: A letter shall be provided stating that the system installer complies with the ENTIRE project drawing, including all general, keyed, and notes to contractor. If the installer intends to deviate from any portion of the specifications, a detailed explanation of reason in which the installer would like to deviate shall be provided in addition to the specification compliance letter. NO DEVIATIONS SHALL BE ACCEPTABLE UNTIL THEY HAVE BEEN APPROVED BY THE PROJECT'S TECHNOLOGY CONSULTANT.

C. Close-out Procedures:

1. Four (4) copies of the following documents shall be delivered to the Architect/Engineer at the time of system acceptance. One (1) final copy of the same documents shall be delivered directly to the project's Technology Consultant upon final closeout of the project. The closeout submittals shall include:

a. Inspection and Test Reports: During the course of the Project, the Contractor shall maintain an adequate inspection system to ensure that the materials supplied and the work performed, conform to contract requirements. The Contractor shall provide written documentation that indicates that materials acceptance testing was conducted as specified. The Contractor shall also provide documentation, which indicates that all cable termination testing was completed and that all irregularities were corrected prior to job completion.

b. Provide complete test reports for all cabling and devices that comprise system as outlined in this document.

c. Include the Name, address and telephone of the authorized factory representative with a 24-hour emergency service number.

d. The manual shall also include Manufacturer's data sheets and installation manuals/instructions for all equipment installed and a list of recommended spare parts.

e. Generic or typical owner's instruction and operation manual shall not be acceptable to fulfill this requirement.

f. An up-to-date record ("as-built") set of approved shop drawing prints that have been revised to show each and every change made to the structure cabling system from the original approved shop drawings. Drawings shall consist of a scaled plan of each building showing the placement of each individual item of the technical cabling system equipment as well as raceway size and routing, junction boxes, and conductor size, quantity, and color in each raceway.

g. As-built Drawings shall include cable pathways, device locations with correct labeling, control equipment locations, remote power supply locations, cross connect locations, lightning protection locations, and MDF/IDF locations. The as-built drawings shall be prepared using AutoCad 2002 or later.

Provide the Owner with electronic versions of the as-builts on CD media and (1) hard copy per binder.

h. All drawings must reflect point to point wiring, device address and programmed characteristics as verified in the presence of the engineer and/or the end user unless device addressing is electronically generated, and automatically graphically self-documented by the system.

i. A copy of the manufacturer's warranty on the installed system.

j. Any keys to cabinets and/or equipment and special maintenance tools required to repair, maintain, or service the system.

k. Operating and Maintenance Instructions for all devices within the system. These instructions shall reflect any changes made during the course of construction, and shall be provided to the Owner, for their use, in a three-ring binder labeled with the project name and description. (4 copies)

l. Upon completion of the work and at a time designated by the Architect or owner, provide formal training sessions for the Owner's operating personnel to include location, operation, and maintenance of all included systems and equipment. Minimum amount of training time shall be at least 8 hours and shall be broken up into two (2) hour sessions. Provide copies

m. One (1) 30" x 42" laminated floor plan sheets illustrating technology drops and cable designation. Contractor shall provide one complete floor plan sheet for each telecommunications room (MDF or IDF)

PART 2 – PRODUCTS

2.1 CAFETERIA SOUND REINFORCEMENT SYSTEM

A. LOCAL SOUND EQUIPMENT RACK

1. Middle Atlantic DWR-35-22 wall mount rack
   a. Rack shall be mounted to structure and isolated from wall with fire rated plywood
   b. Contractor shall install back can in a timely manner to allow the electrician to connect associated conduits.
   c. Conduits shall be routed in the wall and fed through the provided knock out or on the wall and fed through the provided knock outs on the back can
2. Middle Atlantic LVFD35 vented rack door
3. Fill all unused panel space with Middle Atlantic EB Series blank panels.
4. Provide 5 spare keys for rack.
5. Provide adequate ventilation
6. Middle Atlantic D3 storage drawer, as required
   a. Middle Atlantic FI3, foam insert.
   b. Form insert to accommodate wireless transmitters and accessories.

B. POWER DISTRIBUTION AND CONTROL

1. Middle Atlantic PDS-615R - 3 tier power sequencer.
2. Middle Atlantic PD-915R-SP - surge protection and power distribution, as required

C. AUDIO INPUT DEVICES

1. ProCo IRACK - auxiliary input
   a. RDL STD-600 – audio combiner
2. Tascam CD200BT – CD player

D. WIRELESS MICROPHONES

D. 2 qty. Shure QLX124/85/SM58
   a. 1 qty. Shure UA221 - antenna splitter.
   b. 2 qty. Shure SM35-TQG.

E. DIGITAL SIGNAL PROCESSOR

1. I/O-8 Flex - Channel Expander
   a. Shall function as extension of gym digital signal processor.
2. QSC TSC-55w-G2 – Touch screen
3. Program Audio/Video System and GUI to allow for control of split/combined (gym/stage)/full combined (gym/stage/cafeteria) audio and video matrix routing,

display On/Off, input selection, audio level control and mute for each audio input, projection system selection, projection screen up / down and other such controls as directed by the Owner. Coordinate with Owner and Consultant for final GUI functionality and layout. Coordinate with Owner for Logo to be displayed on splash screen. Provide a numeric (0-9) password page immediately after the splash page. Provide a simple way for Owner to change and store new password from the GUI.

F. AUDIO AMPLIFERS
   1. QSC PLD4.2 - Multi-Channel Processing Amplifier
G. LOCAL SOUND SYSTEM SPEAKERS
   1. JBL Control 226C/T - Coaxial Ceiling Loudspeaker
      a. Quantity as shown on drawings. Provide safety cables per speaker.
      b. Tap each speaker at 20 watts.
      c. Combined mode - speakers shall be time aligned by row from the front of stage.
      d. Split mode - speakers shall function autonomously from gym and stage.
H. VIDEO INPUTS
   1. Tascam BD-MP4K - Professional-grade 4K UHD Blu-ray player
I. VIDEO SYSTEM
   1. QSC NV-32-H - Network Video Endpoint
   2. Provide all required cabling.
   3. Verify location and connectivity with Owner.
J. VIDEO SYSTEM
   1. QSC NV-32-H - Network Video Endpoint
   2. Provide all required HDMI cabling.
   3. Verify location and connectivity with Owner.
K. VIDEO PROJECTION SCREEN
   1. Da-lite 14091 - Advantage Deluxe Tensioned 110v 255" 16:10
L. VIDEO PROJECTOR ‘CMP’
   1. Panasonic PT-MZ770/L – 8,000 lumen WUXGA LCD Laser light source projector

2.2 GYMNASIUM AND AMPHITHEATER SOUND REINFORCEMENT SYSTEM

A. LOCAL SOUND EQUIPMENT RACK
   1. Middle Atlantic DWR-35-22 wall mount rack
      a. Rack shall be mounted to structure and isolated from wall with fire rated plywood
      b. Contractor shall install back can in a timely manner to allow the electrician to connect associated conduits.
      c. Conduits shall be routed in the wall and fed through the provided knock out or on the wall and fed through the provided knock outs on the back can
   2. Middle Atlantic LVFD35 vented rack door
   3. Fill all unused panel space with Middle Atlantic EB Series blank panels.
   4. Provide 5 spare keys for rack.
   5. Provide adequate ventilation
   6. Middle Atlantic D3 storage drawer, as required
      a. Middle Atlantic FI3, foam insert
      b. Form insert to accommodate wireless transmitters and accessories.
B. POWER DISTRIBUTION AND CONTROL
   1. Middle Atlantic PDS-615R - 3 tier power sequencer.
   2. Middle Atlantic PD-915R-SP - surge protection and power distribution, as required
C. AUDIO INPUT DEVICES
   1. ProCo IRACK - auxiliary input
      a. RDL STD-600 – audio combiner
   2. Tascam CD200BT – CD player
      a. RDL STD-600 – audio combiner
D. WIRED MICROPHONES

1. Overhead microphones
    a. 4 qty. Shure MX202B/C microphones
    b. ProCo WPE – 109 plates above stage.
    c. Mic elements shall be at 10' A.F.F. without obstructing projectors.
    d. Install microphones to provide even acoustical coverage over main performance area of the stage.
    e. Provide all hardware and back boxes install mics and to provide a 5:1 safety factor.

    DO NOT HANG MICROPHONES FROM LIGHTING OR CURTAIN BATTENS

E. WIRELESS MICROPHONES
1. 2 qty. Shure QLX124/85 - G50 Wireless Mic System
    a. 1 qty. Shure UA221 antenna splitter.
    b. 2 qty. Shure SM35-TQG.

F. DIGITAL SIGNAL PROCESSOR
1. Core 110f - Q-SYS Core
    a. Combined mode - speakers shall be time aligned by row from the front of stage.
    b. Split mode - speakers shall function autonomously from gym and stage.
2. QSC TSC-55w-G2 – Touch screen
    a. Installed in rack
3. Program Audio/Video System and GUI to allow for control of split/combined (gym/stage)/full combined (gym/stage/cafeteria) audio and video matrix routing, display On/Off, input selection, audio level control and mute for each audio input, projection system selection, projection screen up / down and other such controls as directed by the Owner. Coordinate with Owner and Consultant for final GUI functionality and layout. Coordinate with Owner for Logo to be displayed on splash screen. Provide a numeric (0-9) password page immediately after the splash page. Provide a simple way for Owner to change and store new password from the GUI.

F. AUDIO AMPLIFERS
1. 2 qty. QSC PLD4.2 - 4-Channel Processing Amplifier (Gym mains and subwoofer)
2. 1 qty. QSC PLD4.3 - 4-Channel Processing Amplifier (Stage mains and subwoofer)
3. 1 qty. QSC PLD4.5 - 4-Channel Processing Amplifier (Outdoor)

G. LOCAL SOUND SYSTEM SPEAKERS
1. JBL AC195 - Two-Way Full-Range Loudspeaker. Ceiling mount 'S-L'
    a. Optional U-bracket
    b. Mount facing down from structure in locations indicated on drawings.
2. JBL AC115S - High Power Subwoofer System 'B'
    a. Mount facing down from structure in locations indicated on drawings.
3. AM7212/95 - High Power 2-Way Loudspeaker. Indoor wall mount 'S-L'
    a. Rotate horn 50-derees wide by 90-degrees high
    b. Optional U-bracket
    c. Mount on walls in locations indicated on drawings.
4. JBL AW266 - High Power 2-Way All Weather Loudspeaker with.
    a. Optional U-bracket
    b. Mount on walls in locations indicated on drawings.
5. Locations are approximate and must be verified on location. Coordinate with General contractor for final locations and finishes.
6. Supply all rigging, safety, cabling, and terminations required

H. VIDEO INPUTS
1. Tascam BD-MP4K - Professional-grade 4K UHD Blu-ray player
2. Custom rack panel with 2 HDMI inputs
    i. 2 qty. Gefen GTB-HDBT-POL-BLK, HDBaseT Extender

I. VIDEO SYSTEM
1. QSC NV-32-H - Network Video Endpoint
2. Provide all required cabling.

3. Verify location and connectivity with Owner.

J. VIDEO PROJECTION SCREENS
1. Da-lite 14183 - Tensioned Professional Electrol

K. VIDEO PROJECTOR 'CMP'
1. Panasonic PT-MZ10KL 10k projector (gym)
   a. With lens ET-EMW200
   b. Chief VCMU - Heavy Duty Universal Projector Mount
2. Panasonic PT-MZ16KL 16k projector (outdoor)
   a. With lens ET-EMW200
   b. Chief VCMU - Heavy Duty Universal Projector Mount

L. OUTLETS / PLATES
1. Remote Gym Indoor Antenna 'W'
   a. 1 qty. RF Venue - DFIN antenna
   b. Mount antenna in space to be covered (aim at stage steps) to provide optimum RF reception.
   c. American Time G3020DD - Guard Polycarbonate 15″ X 9 1/2″ X 16″
2. Remote Stage Antenna: 'W'
   a. UA864 - Ceiling-Mounted Wideband Antenna

2.3 LEARNING COMMONS

A. LOCAL SOUND EQUIPMENT RACK
1. Middle Atlantic DWR-35-22 wall mount rack
   a. Rack shall be mounted to structure and isolated from wall with fire rated plywood
   b. Contractor shall install back can in a timely manner to allow the electrician to connect associated conduits.
   c. Conduits shall be routed in the wall and fed through the provided knock out or on the wall and fed through the provided knock outs on the back can
2. Middle Atlantic LVFD35 vented rack door
3. Fill all unused panel space with Middle Atlantic EB Series blank panels.
4. Provide 5 spare keys for rack.
5. Provide adequate ventilation
6. Middle Atlantic D3 storage drawer, as required
   a. Middle Atlantic FI3, foam insert
7. Form insert to accommodate wireless transmitters and accessories.

B. POWER DISTRIBUTION AND CONTROL
1. Middle Atlantic PDS-615R - 3 tier power sequencer.
2. Middle Atlantic PD-915R-SP - surge protection and power distribution, as required

C. DIGITAL SIGNAL PROCESSOR
1. Core 8 Flex - Q-SYS network/analog I/O processor
2. Program Audio/Video System and GUI to allow for control of audio and video routing, display On/Off, input selection, audio level control and mute for each audio input, projection system selection, projection screen up / down and other such controls as directed by the Owner. Coordinate with Owner and Consultant for final GUI functionality and layout. Coordinate with Owner for Logo to be displayed on splash screen. Provide a numeric (0-9) password page immediately after the splash page. Provide a simple way for Owner to change and store new password from the GUI.

D. AUDIO AMPLIFERS
1. 1 qty. QSC PLD4.5 - Multi-Channel Processing Amplifier

E. LOCAL SOUND SYSTEM SPEAKERS
1. JBL PD6212/66 - Precision Directivity Full Range Two-Way Loudspeakers

F. VIDEO INPUTS
1. Tascam BD-MP4K - Professional-grade 4K UHD Blu-ray player

G. VIDEO SYSTEM
1. QSC NV-32-H - Network Video Endpoint

2. Provide all required cabling.
3. Verify location and connectivity with Owner.

H. VIDEO PROJECTION SCREEN
1. Da-Lite 29256G - Wireline Advantage 120 x 192" Motorized Projection Screen

I. VIDEO PROJECTOR 'CMP'
1. Panasonic PT-MZ16KL 16k projector (outdoor)
a. With lens ET-EMW200
b. Chief VCMU - Heavy Duty Universal Projector Mount
2. Draper 300251 - SLX14 scissor lift 14'2" drop, 16 3/8" retracted with 110v

2.4 SOUND SYSTEM OUTLETS / PLATES – ALL SYSTEMS

Quantity per system as shown on drawings.

A. AUXILIARY INPUT PLATE 'AX'
1. RDL DB-J3M Mic/Line Input Assembly
a. Provide for outdoor applications
i. TayMac MM720C - Extra Duty 1-Gang JUMBO Weatherproof Cover

B. AUDIO VIDEO INPUT PLATE 'AV'
1. HD-HWP-Tx Transmitter Wall Plate

C. CONTROL PANEL 'CP'
1. QSC TSC-55w-G2 – Touch screen
a. FSR WB-PS2G - Wall Plate Mounting Cover

D. MICROPHONE PLATES
1. PROCO WPE–103 'M2'
a. Coordinate engraved 1/8" label with touch screen programming.

E. Remote Antenna: 'W'
1. UA864 - Wall-Mounted Wideband Antenna
2. Shure UABIAST (as needed)

F. Assisted listening system antenna 'H'
1. Williams Sound ANT 034 Remote Antenna Kit
2. ProCo WP-1019 – 50ohm BNC passthrough wall plate

2.5 ASSISTED LISTENING SYSTEM

A. Provide 1 qty. Williams Sound PPA 457 PRO Assistive Listening System as required for ADA and other applicable laws.
1. Provide adequate amount of receivers, earpieces, and neck loops to meet TAS and ADA standards as required by Law.
2. Install antenna in area served to provide optimum RF reception.
3. Install Signage / Wall Plaque at location as directed by Architect.

2.6 ACCESSORIES – ALL SYSTEMS. EACH VENUE SHALL BE EQUIPPED WITH QUANTITIES INDICATED BELOW.

A. PORTABLE EQUIPMENT
1. 2 qty. Atlas IED SMS5B - floor stands for microphones
2. 2 qty. Atlas IED DS-5E - desk stands for microphones

B. WIRED MICROPHONES
1. 4 qty. Shure SM58S

C. CABLES
1. 6 qty. Shure C25E - 25 ft XLR cable
2. 1 qty. Rapco MINI3-10 - MINI 3 Cond 3.5mm M-3.5mm M

2.7 REMOTE OVERRIDE FROM INTERCOM SYSTEM – ALL REMOTE SYSTEMS

A. Provide RDL XT70A for each system to duck local PA during all call. Provide Isolation transformer for each device.

2.8 REMOTE SYSTEM POWER DOWN FROM FIRE ALARM SYSTEM – REQUIRED FOR ALL INSTALLED LOCAL SOUND SYSTEMS

A. Connect Fire Alarm cabling (by others) to any and all necessary hardware, relays, resistors, etc. required to provide for A/V System power shutdown via Middle Atlantic PDS-615R Sequence Up/Down connection on rear of Middle Atlantic unit. Division 27 Contractor shall provide, install, and connect all necessary hardware, relays, resistors, etc. required for Fire Alarm Override functionality. Coordinate with Fire Alarm Contractor.

2.9 INSPECTIONS

A. General: Conformance to the installation practices covered above are to be verified when completed. In some cases, the Owner/ Designer may inspect before acceptance.

2.10 SOUND COVERAGE

A. Adjust speaker wattage taps to provide clear, uniform sound coverage throughout all venues through entire volume range of amplifier, provide limiter circuit and controls on amplifier to prevent over-driving speaker system.

PART 3 - EXECUTION

3.1 INSTALLATION

A. Provide and install Sound Reinforcement Systems as required. All rack mounted equipment and their controls shall be labeled with 1/4” lamicoid strips engraved with 1/8” high block letters indicating device operation and level of control function. Verify exact location of equipment racks and remote source control panel with Architect prior to rough-in.

B. Coordinate final connection of power and ground wiring to equipment racks. Power and ground wiring shall terminate inside equipment racks and be hard wired directly to ground busses to ensure uninterrupted operation.

C. All equipment and enclosures described in this specification shall be permanently attached to the structure and held firmly in place. Supports shall be adequate to support their loads with a safety factor of at least 3X the weight of the equipment or enclosure.

D. The process of equalizing and testing the Audio Sound System may necessitate moving and adjusting certain component parts (ex. loudspeakers). This shall be done at no additional cost to the owner.

E. Take precautions as necessary to prevent and guard against electromagnetic and electrostatic noise interference.

F. Exercise care in wiring to avoid damage to the cables and to the equipment. Isolate cables carrying signals at different levels and separate to restrict channel bleed-through the feedback oscillation in any amplifier section. Connect all loudspeakers electrically in phase, using the same wire color code for speaker wiring throughout the project. Make all joints and connections with resin core solder or with approved mechanical connectors. Install three conductor individually wired ground 120 VAC stripline in each rack.

G. Keep wiring separated into four groups of conduit for microphone level circuits (level below -20dBm), line level circuits (up to +30dBm), loud speaker circuits (above +30 dBm), and power circuits.

H. Locate wireless microphone system antennas and hearing assist system antennas at or above ceiling or at bar joist height in areas without ceilings. Coordinate exact location with owner. Provide adequate protective guards. Adjust antenna location for best possible reception/transmission in area of coverage.

I. Provide hearing assist transmitter(s) and receivers for each sound reinforcement system. The quantity of hearing assist receivers for each system shall be equal to a minimum of four (4) percent of the total seating capacity, but in no case less than ten (4) receivers for the area of coverage of each local sound reinforcement system.

3.2 CABLE

A. GENERAL

1. Single system cables may be grouped together in a common conduit or cable support of adequate capacity to facilitate the ease of installation and prevent conductor or insulation damage.
2. Do not group conductors or cables of different systems in one common conduit or cable supports.
3. Install cables as recommended by the system manufacturer. Conductor quantities specified are minimum required. Conductors to be installed shall be coordinated with the system equipment supplier. Cables installed on exposed surfaces, in inaccessible locations, or underground shall be in conduit.
4. Cables installed above accessible ceiling spaces, may be installed without conduit. All cables not installed in conduit shall be plenum rated. Install cables that are not available with a plenum rating in conduit.
5. Cables installed in hollow wall spaces shall be installed in conduit to an accessible location.
6. Tag each circuit at each end and at each terminal with a separate tag indicating area served.
7. Color code wire in accordance with IPCEA standards.
8. Terminate speaker cables in junction box.
9. **ALL LOCAL SOUND DISTRIBUTION SYSTEM CABLE ON THE ENTIRE PROJECT SHALL BE GREY IN COLOR.**

B. Coordinate final connection of power and ground wiring to equipment racks. Power and ground wiring shall terminate inside equipment racks, and be hard wired directly to ground busses to ensure uninterrupted operation.

C. Take precautions as necessary to prevent and guard against electromagnetic and electrostatic noise interference.

D. Exercise care in wiring to avoid damage to the cables and to the equipment. Isolate cables carrying signals at different levels and separate to restrict channel bleed-through the feedback oscillation in any amplifier section. Connect all loud speakers electrically in phase, using the same wire color code for speaker wiring throughout the project. Make all joints and connections with resin core solder or with approved mechanical connectors. Install three conductor individually wired ground 120 VAC stripline in each rack.

E. Keep wiring separated into four groups of conduit for microphone level circuits (level below -20dBm), line level circuits (up to +30dBm), loud speaker circuits (above +30 dBm), and power circuits.

F. Unless otherwise noted, provide the following cable types (or equivalent) for each application:

1. West Penn 454 #22 AWG twisted pair / shielded for Microphone and Line level signals.
2. West Penn C210 #10 AWG twisted pair for subwoofer / low frequency speakers.
3. West Penn 227 #12 AWG twisted pair for conventional, full range sound reinforcement speakers.
4. West Penn 226 #14 AWG twisted pair for 70v sound reinforcement speakers.
5. West Penn 810 RG-8 coax cable for RF signal lines.

6. West Penn 4246 CAT6 cable for Local Sound/Video Network.
7. West Penn 4246F CAT6 F/UTP cable for Digital Video.
8. West Penn 841 RG-6 75 ohm cable for Assistive Listening system where required.
9. Provide plenum rated cable where required.

G. Cables, wiring, and interconnect terminal strips to be logically, legibly, and indelibly labeled for immediate identification by a direct hot-stamp method or a factory stamped closed sleeve method as approved. Adhesive strip labels are acceptable only if sealed with transparent heat-shrinkable tubing to hold the marker in its position. Provide all wiring labeling information on schematic diagram in project record drawings. Labeling equal to Brady PM-1M “Porta Mark”, T&B heatshrink markers, or approved equal.

3.4 CABLE PATHWAYS

A. Cable Support:

1. All wire not installed inside conduit or a designated cable tray system shall be installed in a dedicated cable support system for the entire run of each cable. Including, but not limited to service loops.
   a. Approved Cable Support Product:
      PANDUIT® Corporation J-MOD™ modular support system (sized appropriately for the number of wires being installed. Reference the manufacturer’s specifications for the suggested maximum cables per support size.
2. The approved cable support system shall be attached directly to the building steel at a serviceable height. In the event that the building steel is not 5’ of the finished ceiling, the contractor shall provide a dedicated threaded rod extending within 5’ of the finished ceiling and mount the J-MOD™ support hook to the treaded rod.
3. J-MOD™ cable support shall be installed at a maximum of 5’ on center.
4. All cable installed shall be attached to the J-MOD™ support system with plenum rated Velcro and a plenum rated Velcro tie shall be installed between each J-MOD™ cable support to keep wires neatly bundled throughout the entire run.
5. **ABSOLUTELY NO CABLE, NOT INSTALLED IN CONDUIT, WILL BE ALLOWED TO BE ATTACHED DIRECTLY TO THE BUILDING’S STEEL OR SUPPORTED IN ANY OTHER METHOD THAN THAT STATED ABOVE.**
6. **IT IS THE RESPONSIBILITY OF THE INSTALLING CONTRACTOR TO COORDINATE WITH ALL OTHER TRADES ON THE PROJECT TO INSURE THAT THE PATHWAY OF THIS SYSTEM DOES NOT INTERFERE WITH THE INSTALLATION OF THE OTHER TRADES AND TO PREVENT THE INSTALLED PRODUCT OF OTHER TRADES FROM PUTTING STRAIN ON THE INSTALLED WIRING.**
7. **Do not route cable through webbing of structural steel.**

B. Conduit / Raceway:

1. All wire shall be installed in an approved conduit/raceway system (except where permitted by NEC and the local authority having jurisdiction). Maximum conduit "fill" shall not exceed 40% per NEC.
2. Conduit and raceway system shall be installed as specified under the general electrical section of the specifications, and per NEC.
3. Minimum conduit size shall be 3/4" EMT. Install conduit per engineered shop drawings.
4. Systems utilizing open wiring techniques with low smoke plenum cable shall provide conduit in all inaccessible locations, inside concealed walls, all mechanical/electrical rooms, or other areas where wiring might be exposed or subject to damage.
5. All conduit ends shall have a protective bushing to prevent cable damage. BUSHINGS MUST BE INSTALLED PRIOR TO INSTALLING CABLE. CUTTING BUSHING TO INSTALL AROUND INSTALLED CABLES WILL NOT BE

ACCEPTED.

3.5 TESTING AND ACCEPTANCE

A. General

1. After completion of installation and start up procedures, commence a verification and testing sequence leading to final acceptance of the owner.
2. Submit for approval, a sample of the form on which the test will be reported.
   a. Identify project
   b. Signatures of participants and observers
   c. Results
   d. Description of adjustment or corrections of defective components.
   e. Date
3. Provide schedule of tests. Estimate dates of significant events.
   f. All testing shall be performed in the presence of the Owner/Architect/Engineer.
4. Test, calibrate and adjust each device in the system
5. Verify operation of all specified functions.
6. Provide documentation of all tests and verifications as specified.

B. The following tests and adjustments shall be performed by the Contractor. All equipment required supplied by the Contractor. Follow EIA standards RS-160 and RS-219 in performing tests. Record the results of these tests on project record drawings. Submit written results of tests to Architect prior to scheduled equalization and final inspection date.
1. Measure and record impedance of each speaker line terminating at equipment racks at frequency of 1,000 Hz. with loud speakers connected to their respective lines.
2. Check system to ensure freedom from oscillations or stray RF pickup. Check inputs with no signal and with typical program material driving system to full output. Detect unwanted signals.
3. Provide (2) copies of all programming on Flash Drives for each system installed to the owner prior to substantial Completion.

3.6 INSTRUCTIONS

A. Provide 8 hours, 2 hours on each of four days, of instruction to the Owner designated user and maintenance personnel on the use and operation of the system. Instructing personnel shall be a competent engineer or technician familiar with the installed system. Instruction times shall be arranged by the Owner.

3.7 ACCEPTANCE BY OWNER

A. Upon completion of initial tests and delivery of all documents, diagrams, and project record drawings, notify the Architect in writing that the installation has been completed in accordance with the requirements of the specification and is ready for equalization and inspection by representatives of the Owner.

B. Acceptance testing will include operation by the Owner of each major system and other components (microphones, consoles, racks, loud speakers, etc.) deemed necessary. Contractor will assist as necessary in this testing.

C. In the event the need for further adjustments or work becomes evident during acceptance testing, the Contractor will continue his work until the system is acceptable, at no additional cost to the Owner.

D. Provide 21”x30” laminated copies of As Built schematics affixed to the inside door of each system’s rack.

3.8 EXTRA WARRANTY PROVISIONS

A. Labor and materials provided under this section shall be warranted for not less than one (1) year after final acceptance of the work by the Owner. Defects occurring in labor or materials within the one year warranty are to be rectified by replacement or repair. This contractor, within the warranty period, is required to answer all service calls and requests for information within a 24 hour period and repair or replace any faulty items within a 24 hour period, without charge, including parts and labor.

END OF SECTION 27 51 23.41

GENERAL SUBGRADE NOTES AND TYP DETAILS

S-030

FOR BLUEBEAM LABELING/OCR:

GENERAL FOUNDATION NOTES:

1. THE FOUNDATION DESIGN AND SUBSURFACE INFORMATION IS BASED ON THE GEOTECHNICAL INVESTIGATION REPORT AS FOLLOWS:
   GEOTECHNICAL CONSULTANT: PARADIGM CONSULTANTS, INC.
   GEOTECHNICAL REPORT NUMBER: 21-1027
   GEOTECHNICAL REPORT LOCATION: FRIENDSWOOD, TEXAS
   DATE OF REPORT: JUNE 24, 2021
2. ALL RECOMMENDATIONS THEREIN THAT RELATE TO THE WORK SHOWN ON THESE DRAWINGS SHALL BE USED. FOR ANY CONFLICTS BETWEEN THE GEOTECHNICAL REPORT AND THESE DRAWINGS, THE GC SHALL ISSUE A REQUEST FOR INFORMATION/CLARIFICATION.
3. GEOTECHNICAL REPORT IS AVAILABLE TO THE GENERAL CONTRACTOR UPON REQUEST TO THE OWNER. THE INFORMATION INCLUDED THEREIN MAY BE USED BY THE GENERAL CONTRACTOR FOR HIS GENERAL INFORMATION ONLY. THE ARCHITECT AND ENGINEER WILL NOT BE RESPONSIBLE FOR THE ACCURACY OR APPLICABILITY OF SUCH DATA THEREIN.
4. PREPARED GRADE AREA UNDER ALL BUILDING SLABS AND GRADE BEAMS SHALL BE COVERED WITH A 15 MIL WATER VAPOR BARRIER MEETING THE REQUIREMENTS OF ASTM E 1745 (LATEST EDITION), CLASS A OR BETTER WITH MAXIMUM WATER PERMEANCE OF 0.01 PERMS WHEN TESTED IN ACCORDANCE WITH ASTM E96. THE RETARDER/BARRIER/MEMBRANE SHALL BE INSTALLED AND LAPPED IN ACCORDANCE WITH THE REQUIREMENTS OF ASTM E1643 (LATEST EDITION). PENETRATIONS SHALL BE SEALED IN STRICT ACCORDANCE WITH THE MANUFACTURER'S RECOMMENDATIONS AND REQUIREMENTS.
5. THE CONTRACTOR SHALL READ THE GEOTECHNICAL REPORT AND BE THOROUGHLY FAMILIAR WITH SITE AND SUBGRADE INFORMATION GIVEN THEREIN. ALL SUBGRADE PREPARATION, FILL, FILL PLACEMENT, AND FOUNDATION CONSTRUCTION SHALL BE PERFORMED IN STRICT COMPLIANCE WITH THE STRUCTURAL DOCUMENTS AND THE GEOTECHNICAL REPORT, AND SHALL BE OBSERVED, TESTED, AND APPROVED BY THE PROJECT'S GEOTECHNICAL-ENGINEER-OF-RECORD (GER) PRIOR TO PROCEEDING WITH FOUNDATION CONSTRUCTION.

EARTHWORK STRUCTURAL TESTING AND INSPECTIONS:

1. UNLESS NOTED OTHERWISE BY THE OWNER OR ARCHITECT, THE GENERAL CONTRACTOR SHALL NOTIFY THE GEOTECHNICAL ENGINEER OR OTHER AUTHORIZED INSPECTOR DURING EARTHWORK OPERATIONS, AND KEEP A COMPETENT TRAINED TECHNICIAN ASSIGNED TO THE PROJECT ON SITE DURING OPERATIONS. SERVICES PROVIDED SHALL INCLUDE:

A. OBSERVE STRIPPING OPERATIONS AND EVALUATE THE REQUIRED STRIPPING DEPTH DURING THESE OPERATIONS.
B. OBSERVE PROOFROLLING OPERATIONS AFTER SITE STRIPPING AND DETERMINE IF ANY SOFT SPOTS NEED TO BE UNDERCUT TO FIRM SOILS, REPLACED WITH SELECT FILL AND RECOMPACTED.
C. VERIFY THAT THE SUBGRADE IS SCARIFIED, MOISTURE CONDITIONED, AND LIME STABILIZED (IF REQUIRED) PER SUBGRADE PREPARATION.
D. THE SELECT FILL PAD MATERIAL SHALL BE TESTED FOR ACCEPTABILITY AND A MOISTURE DENSITY CURVE SHALL BE ESTABLISHED. SELECT FILL MATERIAL SHALL BE AS INDICATED ON SUBGRADE PREPARATION.
E. VERIFY THAT THE SELECT FILL IS PLACED IN EIGHT INCH LOOSE LIFTS AND COMPACTED PER SUBGRADE PREPARATION.
F. SELECT FILL MATERIAL SHALL BE TESTED DURING PLACEMENT OF EACH LIFT FOR THE ATTERBERG LIMITS IN ACCORDANCE WITH ASTM D4318-98 METHOD B "STANDARD TEST METHOD FOR LIQUID LIMIT, PLASTIC LIMIT AND PLASTICITY INDEX OF SOILS" TO VERIFY THAT THE SELECT FILL MATERIAL IS IN ACCORDANCE WITH THE ORIGINALLY APPROVED SELECT FILL MATERIAL. PROVIDE TESTS PER SUBGRADE PREPARATION.
G. PROVIDE FIELD MOISTURE TESTS FOR THE FULL DEPTH OF THE PAD PER SUBGRADE PREPARATION.
H. OBSERVE THE EXCAVATION DAILY AND ENSURE THAT THE CONTRACTOR MAINTAINS A CLEAN EXCAVATION THAT IS FREE OF WATER 100% OF THE TIME. CONTRACTOR SHALL PROVIDE PUMPS AS REQUIRED TO REMOVE WATER AT ALL TIMES.
I. OBSERVE GRADING OPERATIONS TO ENSURE THAT PROPER DRAINAGE AWAY FROM THE BUILDING PAD IS PROVIDED.

SUBGRADE PREPARATION:

1.THE NEAR-SURFACE SOILS ARE SENSITIVE TO MOISTURE CONDITIONS AND MAY CREATE A PERCHED WATER CONDITION. THE SURFICIAL SOILS MAY EXPERIENCE PUMPING AND BECOME UNABLE TO SUPPORT CONSTRUCTION EQUIPMENT AND ACTIVITIES DURING AND IMMEDIATELY AFTER A PERIOD OF WET WEATHER. IF THE SURFACE SOILS CANNOT SUPPORT CONSTRUCTION ACTIVITY, CONSTRUCTION SHOULD NOT PROCEED UNTIL THE SURFACE CONDITIONS HAVE BEEN REMEDIATED. REMEDIATION TYPICALLY INVOLVES DISKING, DRYING, AND RECOMPACTION DURING DRY WEATHER; EXCAVATION AND REPLACEMENT; OR TREATMENT WITH A CHEMICAL ADDITIVE. CHEMICAL TREATMENT (STABILIZATION) OF THE BUILDING PAD SUBGRADE BEFORE FILL PLACEMENT IS EFFECTIVE IN CREATING A FIRM SUBGRADE ON WHICH CONSTRUCTION MAY PROCEED.

2.THE EXPOSED SOILS WITHIN AND 5-FT BEYOND THE PROPOSED BUILDING AND PAVING AREAS SHOULD BE STRIPPED OF VEGETATION, TOPSOIL, DEBRIS, ORGANIC MATTER, AND OTHER DELETERIOUS MATERIALS AS NECESSARY TO PROVIDE THE REQUIRED AMOUNT OF FILL UNDER THE BUILDING AND EXTENDING OUT BEYOND THE PERIMETER OF THE BUILDING AS SHOWN IN THE SITE PREPARATION DETAIL. STRIPPED SOILS SHOULD NOT BE USED AS SELECT FILL BUT MAY BE SUITABLE FOR LANDSCAPING PURPOSES.

3.TREES SUCH AS THOSE GROWING ON THE SITE PRIOR CONSTRUCTION TEND TO DESICCATE THE SUBGRADE SOILS. WHEN TREES ARE REMOVED FROM AN EXPANSIVE SOIL, SIGNIFICANT SUBSOIL SWELL CAN BEGIN IN THE EXPANSIVE SOILS AS THE MOISTURE REGIME IN THE DESICCATED AREAS OF THE SOIL BEGIN TO EQUALIZE TO THE SURROUNDING SUBSOIL MOISTURE CONDITIONS. EXPANSION OF THE SUBGRADE SOILS AND THE RESULTING HEAVE OF THE BUILDING PAD SOILS, AND SLAB CAN CONTINUE FOR YEARS UNTIL MOISTURE REACHES AN EQUILIBRIUM CONDITION. TO REDUCE THE POTENTIAL MOVEMENTS OF A SLAB-ON-GRADE, PARADIGM CONSULTANTS, INC. RECOMMENDS THE TREE ROOT BALL BE OVER-EXCAVATED BY AT LEAST 4 FT AND BACKFILLED WITH SELECT FILL.

4.PROOFROLLING SHOULD BE PERFORMED IN BUILDING AND PAVING AREAS USING A HEAVY RUBBER-TIRED VEHICLE (STATIC WEIGHT OF AT LEAST 20 TONS AND WITH TIRE PRESSURES OF AT LEAST 90 PSI). THE CONTRACTOR SHALL MAKE AT LEAST TWO COMPLETE PASSES OVER THE AREA WITH THE SECOND PASS PERPENDICULAR TO THE FIRST PASS. AREAS OF THE SUBGRADE THAT ARE OBSERVED TO BE SOFT OR WEAK SHALL BE OVEREXCAVATED AND REPLACED WITH PROPERLY COMPACTED SELECT FILL. PROOFROLLING OPERATIONS SHOULD BE OBSERVED BY PARADIGM CONSULTANTS, INC. TO DELINEATE AREAS THAT REQUIRE REMEDIATION. REMEDIATION TYPICALLY INVOLVES REMOVING AND REPLACING THE SOFT AREAS; DISKING, DRYING AND RECOMPACTING THE SOILS; OR TREATING THE SOILS WITH A CHEMICAL ADDITIVE.

5.TO ACCOMMODATE THE 4-FT OF SELECT FILL BELOW THE SLAB, THE UPPER 2.5-FT OF EXISTING SOIL WILL HAVE TO BE REMOVED AND REPLACED WITH COMPACTED SELECT FILL. THE NEXT 1.5-FT REQUIRED TO ACHIEVE FINAL GRADE WILL ALSO NEED TO BE A SELECT FILL PROPERLY COMPACTED. THE FINAL SURFACE OF THE SELECT FILL SHOULD BE SLOPED AWAY FROM THE BUILDING SLAB ENCOURAGE RUNOFF WATER TO FLOW AWAY FROM THE SLAB. THIS LOWER 2.5-FT OF SELECT FILL SHOULD EXTEND ABOUT 5-FT OUT FROM THE EDGE OF THE SLAB. THE FINAL 1.5-FT OF SELECT FILL PLACED ABOVE GRADE SHOULD EXTEND ABOUT 10-FT OUR FROM THE EDGE OF THE SLAB TO PROVIDE A BUFFER FOR THE LOWER FILL LAYERS.

6.SUBGRADE SHALL BE SCARIFIED AND MOISTURE CONDITIONED TO A EIGHT (8) INCH DEPTH AND THEN RECOMPACTED TO BETWEEN 95 AND 100 PERCENT OF THE MAXIMUM DRY DENSITY AS DETERMINED BY THE STANDARD PROCTOR DENSITY TEST (ASTM D698). OVER-COMPACTION SHOULD BE AVOIDED. THE MOISTURE CONTENT SHALL BE BETWEEN OPTIMUM AND +3 PERCENT OF THE OPTIMUM MOISTURE CONTENT. PROVIDE A MINIMUM OF FOUR (4) FIELD DENSITY TESTS PER LIFT OR ONE (1) FOR EVERY 2,500 SQUARE FEET WHICHEVER IS GREATER. IF WET WEATHER CONDITIONS ARE ENCOUNTERED AND WILL NOT ALLOW FOR ADEQUATE SUBGRADE COMPACTION EFFORTS, THEN THE SUBGRADE SHALL BE LIME STABILIZED WITH 6 TO 8 PERCENT BY VOLUME HYDRATED LIME IN ACCORDANCE WITH THE LIME ASSOCIATION RECOMMENDATIONS. THE OPTIMUM LIME CONTENT SHALL BE DETERMINED AT THE TIME OF CONSTRUCTION BY A LIME SERIES TEST TO DETERMINE THE REQUIRED OPTIMUM LIME CONTENT NECESSARY TO ACHIEVE A pH OF 12.4 WHILE ACHIEVING A PLASTICITY INDEX OF LESS THAN 20. PRIOR TO PROCEEDING WITH THE SELECT FILL PLACEMENT, THE LIME STABILIZED SUBGRADE SHALL BE TESTED AND APPROVED BY THE TESTING LABORATORY.

7.SELECT FILL FOR THE BUILDING PAD SHOULD CONSIST OF INORGANIC LEAN CLAY, FREE OF ROOTS, ORGANICS, AND DELETERIOUS MATERIALS. THE SELECT FILL SHOULD HAVE AT LEAST 50% PASSING THE NO. 200 SIEVE AND HAVE A PI BETWEEN 12 AND 20, WITH A LIQUID LIMIT LESS THAN 35. SELECT FILL PAD MATERIAL SHALL BE TESTED FOR ACCEPTABILITY AND A MOISTURE DENSITY CURVE SHALL BE ESTABLISHED TO CONFIRM THEIR MATERIAL CHARACTERISTICS.

8.SELECT FILL SHALL BE PLACED IN EIGHT INCH LOOSE LIFTS AND COMPACTED TO BETWEEN 95 AND 100 PERCENT OF THE MAXIMUM DRY DENSITY AS DETERMINED BY THE STANDARD PROCTOR DENSITY TEST (ASTM D 698). OVER-COMPACTION SHOULD BE AVOIDED. THE MOISTURE CONTENTS FOR SELECT FILL SHOULD BE WITHIN OPTIMUM AND + 3 PERCENT OF THE OPTIMUM MOISTURE CONTENT. PROVIDE A MINIMUM OF FOUR (4) FIELD DENSITY TESTS ON EACH LIFT OF SELECT FILL OR ONE (1) FOR EVERY 2,500 SQUARE FEET WHICHEVER IS GREATER.

9.SELECT FILL MATERIAL SHALL BE TESTED DURING PLACEMENT OF EACH LIFT FOR THE ATTERBERG LIMITS IN ACCORDANCE WITH ASTM D4318-98 METHOD B "STANDARD TEST METHOD FOR LIQUID LIMIT, PLASTIC LIMIT AND PLASTICITY INDEX OF SOILS" TO VERIFY THAT THE SELECT FILL MATERIAL IS IN ACCORDANCE WITH THE ORIGINALLY APPROVED SELECT FILL MATERIAL. PROVIDE A MINIMUM OF ONE (1) TEST PER LIFT OR ONE (1) FOR EVERY 2,500 SQUARE FEET WHICHEVER IS GREATER WITH A MAXIMUM OF TEN (10)PER LIFT.

10.GENERAL CONTRACTOR PLEASE NOTE: IF SCHEDULING REQUIRES THAT THE INSTALLATION OF THE COMPLETED BUILDING PAD PRIOR TO PLACEMENT OF THE VAPOR BARRIER EXCEEDS TWO MONTHS, AND/OR THE FILL SOILS ARE EXPOSED TO INCLEMENT WEATHER (WET OR DRY) OR TRAFFIC, RECOMPACTION OR MOISTURE ADJUSTMENT OF THE PAD TO AT LEAST 12-IN. DEPTH MAY BE NEEDED TO RETURN THE SOILS TO THE SPECIFIED DENSITY AND MOISTURE RANGE. ALTERNATELY, PROTECTION OF THE FILL SOILS WITH PLASTIC SHEETING OR THE PLACEMENT OF A PROTECTIVE FILL LAYER MAY BE CONSIDERED. THE PLASTIC SHEETING OR PROTECTIVE FILL LAYER MUST BE REMOVED BEFORE SLAB CONSTRUCTION. THE FINAL LIFT SHOULD BE MOISTURE ADJUSTED AND RECOMPACTED BEFORE THE FLOOR SLAB IS PLACED. CONSTRUCTION SHOULD NOT PROCEED ON DRY OR SATURATED SUBGRADE.

11.THE GC SHALL BE AWARE THAT IF THE BUILDING PAD HAS BEEN INSTALLED MORE THAN TWO MONTHS PRIOR TO THE PLACEMENT OF THE VAPOR RETARDER, THE GC SHALL PROVIDE FIELD MOISTURE TESTS FOR THE FULL DEPTH OF THE PAD 96 HOURS PRIOR TO PLACEMENT OF THE WATER VAPOR BARRIER TO ENSURE THAT THE FILL MOISTURE CONTENT HAS BEEN MAINTAINED PRIOR TO CONCRETE PLACEMENT. MOISTURE CONTENTS SHALL BE TAKEN AT 12 INCH VERTICAL INTERVALS WITH A MINIMUM OF TWO TESTS PER BORING AT A RATE OF ONE (1) BORING FOR EVERY 2,500 SQUARE FEET OF PAD WITH A MAXIMUM OF TEN (10). IF THE PAD TESTS SHOW MOISTURE CONTENT OUT OF THE SPECIFIED RANGES, THE TOP SIX (6) INCHES TO ONE FOOT OF MATERIAL SHALL BE REWORKED, MOISTURE CONDITIONED AND RECOMPACTED TO BETWEEN 95 AND 100 PERCENT OF THE MAXIMUM DRY DENSITY AS DETERMINED BY THE STANDARD PROCTOR DENSITY TEST (ASTM D698). THE MOISTURE CONTENT SHALL BE BETWEEN OPTIMUM AND +3 PERCENT OF THE OPTIMUM MOISTURE CONTENT FOR SELECT FILL.

12.CONTRACTOR SHALL MAINTAIN A CLEAN EXCAVATION THAT IS FREE OF WATER 100% OF THE TIME. CONTRACTOR SHALL PROVIDE PUMPS AS REQUIRED TO REMOVE ANY WATER AT ALL TIMES.

13.PLUMBING AND UTILITY TRENCHES WITHIN THE BUILDING PAD SHALL HAVE PIPING BEDDED ON 6" MINIMUM OF CEMENT STABILIZED SAND WITH 4" MINIMUM ALL AROUND. BACKFILL IN UTILITY TRENCHES SHALL CONSIST OF COMPACTED SELECT FILL.

14.IN GENERAL A MINIMUM OF 4 FEET (4 FT) OF SELECT FILL MATERIAL IS REQUIRED UNDER THE FLOOR SLAB (ADDITIONAL FILL REQUIRED AT DITCH, SEE ASSOCIATED NOTES), AND SHALL EXTEND A MINIMUM OF 10'-0" BEYOND THE BUILDING PERIMETER FOR THE UPPER 1.5 FEET AND A MINIMUM OF 5'-0" BEYOND THE BUILDING PERIMETER FOR THE LOWER 2.5 FEET. LEVELING (CUSHION) SAND SHALL NOT BE USED.

EXISTING DITCH BACKFILL:

1.THERE IS A DITCH THAT BISECTS THE PROPERTY IN A NORTH-SOUTH DIRECTION. THE BOTTOM OF THE DITCH IS ABOUT 4-FT BELOW EXISTING GRADE. THIS DITCH SHOULD BE BACKFILLED REGARDLESS OF THE TYPE OF SLAB SUPPORT SELECTED.

2.THE DITCH WILL NEED TO BE DRAINED, THE BOTTOM SHOULD BE CLEANED OR MUCKED OUT OF LOOSE OR WET SOIL. THE SIDES OF THE DITCH SHOULD BE PREPARED USING "BENCHING" TECHNIQUES TO CREATE HORIZONTAL AND VERTICAL SURFACES ALONG THE EDGE OF THE DITCH, LIKE STAIRS OR BENCHES. THIS WILL ALLOW THE FILL TO BE PLACED IN HORIZONTAL LAYERS AND WILL REDUCE THE RISK OF CREATING "FAILURE PLANE" SURFACES SUCH AS WOULD OCCUR WITH A SLOPING SURFACE. THE BOTTOM OF THE DITCH CAN BE PROOF ROLLED TO LOCATE LOOSE OR WEAK SOIL BELOW THE SURFACE.

3.THE TOP 4 FEET OF FILL DIRECTLY BELOW THE SLAB SHOULD BE SELECT FILL WITH A PI RANGING FROM 10 TO 20 AND SHOULD BE COMPACTED TO AT LEAST 95 PERCENT STANDARD PROCTOR (ASTM D698) IN 8-IN. LAYERS. BELOW THIS 4 FEET OF SELECT FILL TO THE BOTTOM OF THE DITCH, THE REMAINING FILL MATERIAL SHOULD BE CLASSIFIED AS "STRUCTURAL FILL" AND HAVE A PI RANGING FROM 20 TO 40 AND SHOULD BE COMPACTED TO AT LEAST 95 PERCENT STANDARD PROCTOR (ATSTM D698) IN 8-IN. LAYERS. ON-SITE NATURAL SOIL IS A CANDIDATE FOR THE STRUCTURAL FILL SINCE IT IS SIMILAR TO THE SOIL ON WHICH THE REMAINDER OF THE FLOOR SLAB WILL BE PLACED. FOR THE AREA OF THE DITCH THAT IS DEEPER THAN 10 FEET BELOW THE SURFACE, SHOULD THEY EXIST, THE STRUCTURAL FILL SHOULD BE COMPACTED TO AT LEAST 95 PERCENT MODIFIED PROCTOR (ASTM D1557) IN 8-IN LAYERS.

SITE DRAINAGE:

1.BASED ON PARADIGM CONSULTANTS' EXPERIENCE WITH SIMILAR PROJECTS, DRAINAGE SHOULD BE ESTABLISHED EARLY IN THE SITE DEVELOPMENT AND MAINTAINED AS THE SITE GRADES CHANGE. DRAINAGE COULD BE CRITICAL IF CONSTRUCTION BEGINS FOLLOWING OR DURING A PERIOD OF WET WEATHER.

2.POSITIVE DRAINAGE AWAY FROM THE STRUCTURE MUST BE DESIGNED, CONSTRUCTED, AND MAINTAINED THROUGHOUT THE STRUCTURE LIFE. WATER SHALL NOT BE ALLOWED TO POND ADJACENT TO THE FOUNDATION.

3.LANDSCAPING SYSTEMS MUST MAINTAIN THE POSITIVE DRAINAGE AWAY FROM THE STRUCTURE AND NOT PERMIT WATER TO IMPOUND ADJACENT TO THE STRUCTURE.

4.TREES AND VEGETATION SHALL NOT BE ALLOWED WITHIN A DISTANCE EQUAL TO THEIR ULTIMATE HEIGHT AWAY FROM THE BUILDING. IRRIGATION SYSTEMS MAY NOT BE EFFECTIVE IN SUPPLYING SUFFICIENT WATER FOR GROWTH.

5.DOWNSPOUTS FROM ROOF DRAINAGE SYSTEMS, DOWNSPOUTS, AND AIR CONDITIONING UNIT DRAINS SHOULD BE DESIGNED TO DISCHARGE WATER AWAY FROM, AND PREFERABLY 10-FT OR MORE FROM, THE THE BUILDING.

6.DRAINAGE THROUGH DRAINPIPES TO THE STORM SEWER IS PREFERRED FOR ALL ROOF DRAINS.

7.SPLASH BLOCKS ARE NOT EFFECTIVE IN DRAINING WATER AWAY FROM THE FOUNDATION AND SHOULD NOT BE USED.

8.WATER DRAINS SHOULD BE TIED TO THE STORM SEWER AND NOT BE ALLOWED TO DRAIN ALONG THE BOUNDARY OF THE BUILDING WITH DISCHARGE AT THE FOUNDATION.

NOTES:

1. PIPES OR CONDUITS SHALL BE PLACED IN THE SELECT FILL MATERIAL. ALL PENETRATIONS TO THE VAPOR BARRIER SHALL BE SEALED PER THE MANUFACTURER'S RECOMMENDATIONS
2. BACKFILL DIRECTLY AROUND PIPE SHALL BE CEMENT STABILIZED SAND (1-SACK MIX). THE REMAINDER OF THE TRENCH INFILL MAY BE SELECT FILL ONLY IF IT CAN BE COMPACTED AND TESTED BY THE TESTING LAB; OTHERWISE, THE GC SHALL USE CEMENT STABILIZED SAND.

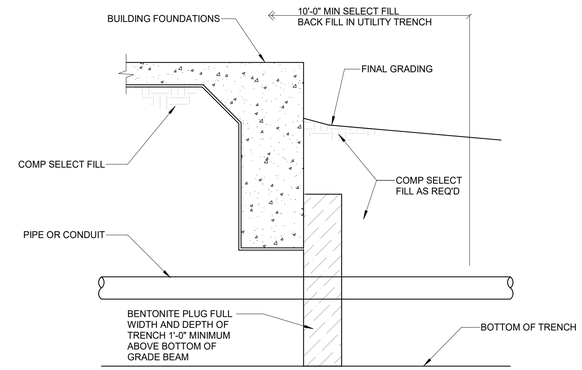

1 PIPE/CONDUIT ENTRY DETAIL
NO SCALE

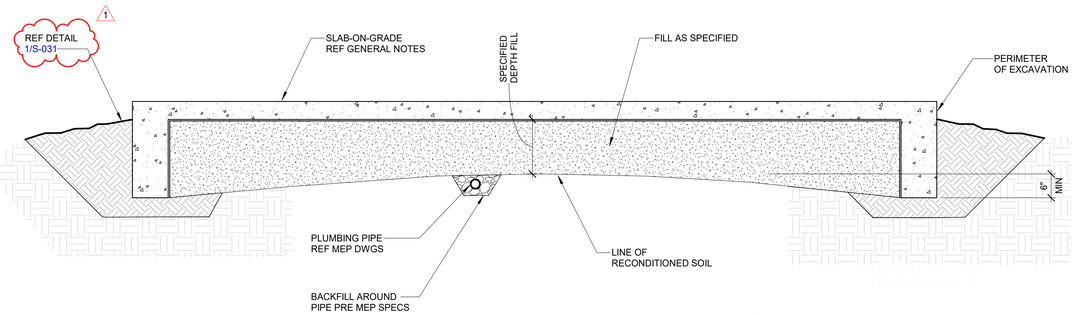

2 TYPICAL DETAIL FOR SUBGRADE PROFILE BELOW SLAB-ON-GRADE
NO SCALE

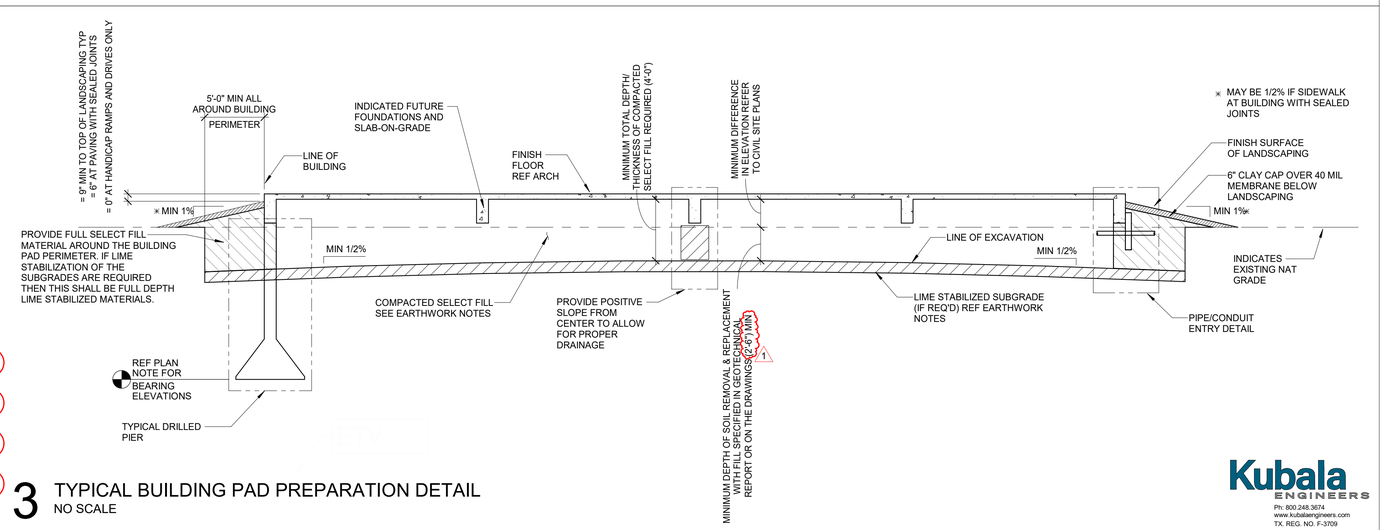

3 TYPICAL BUILDING PAD PREPARATION DETAIL
NO SCALE

Kubala ENGINEERS
Ph: 800.248.3674
www.kubalaengineers.com
TX. REG. NO. F-3709

PBK

ARCHITECT PBK Architects, Inc.
HOUSTON PBK.com
11 Greenway Plaza, 22nd Floor
Houston, TX 77046
713-965-0608 P
713-961-4571 F
TX Firm: BR 1608

CIVIL
DIG ENGINEERS
T 713 940 3238
STRUCTURAL
KUBALA ENGINEERS
T 800 248 3674
MEP/T
LEAF ENGINEERS
T 713 940 3300
FOOD SERVICES
FOODSERVICE DESIGN PROFESSIONALS
T 281 350 2323
BUILDING ENVELOPE
BEAM
T 713 940 3201

CLINE ELEMENTARY SCHOOL
CAMPUS REPLACEMENT

1550 WEST BOULEVARD, FRIENDSWOOD, TX 77546

ISSUE FOR CSP

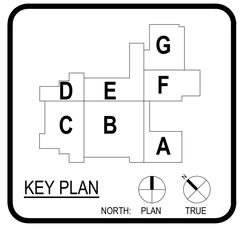

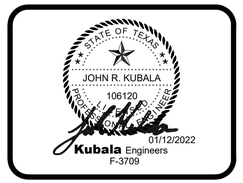

CLIENT
FRIENDSWOOD ISD

DATE	PROJECT NUMBER
DECEMBER 17, 2021	20380

DRAWING HISTORY

No.	Description	Date
1	ADDENDUM #1	01/12/2022

ISSUE FOR CSP

BUILDING NUMBER

GENERAL SUBGRADE NOTES AND TYP DETAILS

S-030

File Path: C:\Users\escarfo\Documents\20380_FISD CLINE ES_STR_R21_emily.scarfo.rvt

CHECKED BY:
Checker
DRAWN BY:
Author
Plot Stamp:
1/11/2022 6:32:43 PM

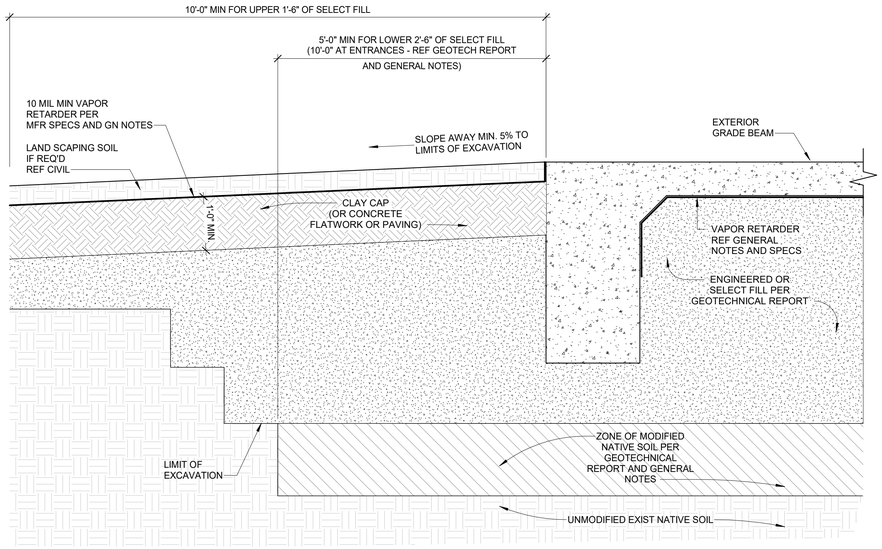

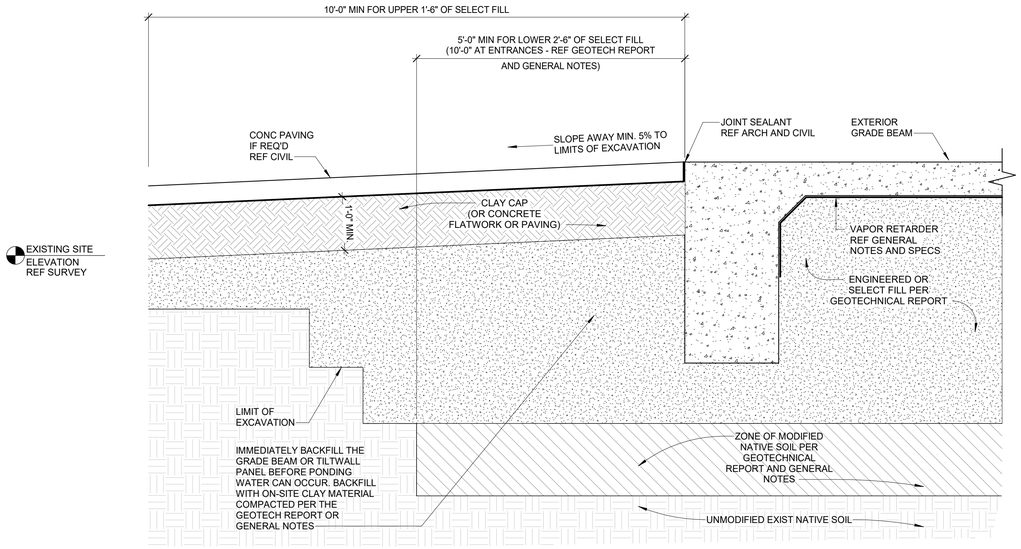

SITE NOTES:

1. ROOF RUNOFF AND SURFACE DRAINAGE SHALL BE COLLECTED AND DISCHARGED AWAY FROM THE STRUCTURES TO PREVENT WETTING OF THE FOUNDATION SOILS. ROOF GUTTERS SHALL BE INSTALLED AND CONNECTED TO DOWNSPOUTS AND PIPES DIRECTING ROOF RUNOFF AT LEAST 10 FEET AWAY FROM THE BUILDINGS, OR DISCHARGED ON TO POSITIVELY SLOPED IMPERVIOUS FLATWORK SUCH AS SIDEWALKS AND /OR PAVING AREAS.
2. SPRINKLER MAINS AND SPRAY HEADS SHALL BE LOCATED AT LEAST 5 FEET AWAY FROM THE BUILDING SUCH THAT THEY CANNOT BECOME A POTENTIAL POINT SOURCE OF WATER DIRECTLY ADJACENT TO THE BUILDING. WATERING OF VEGETATION SHALL BE PERFORMED IN A TIMELY AND CONTROLLED MANNER AND PROLONGER WATERING SHALL BE AVOIDED. LANDSCAPED IRRIGATION ADJACENT TO THE FOUNDATION STRUCTURE SHALL BE MINIMIZED OR ELIMINATED. SPECIAL CARE SHALL BE TAKEN SUCH THAT UNDERGROUND UTILITIES DO NOT DEVELOP LEAKS WITH TIME.

1 TYPICAL EXTERIOR GB BACKFILL DETAIL
NO SCALE

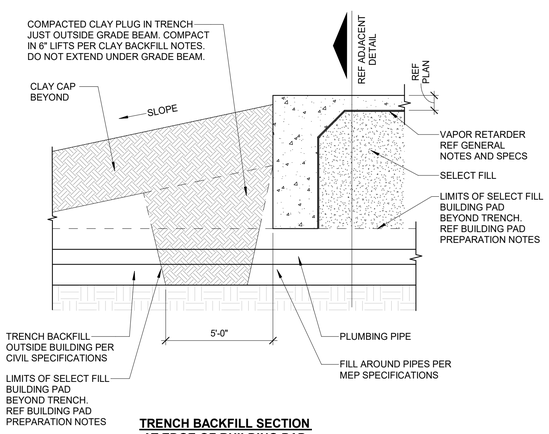

TRENCH BACKFILL SECTION AT EDGE OF BUILDING PAD

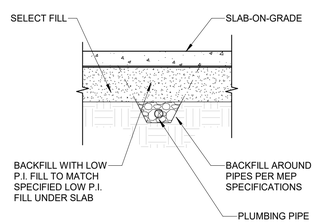

SOIL PREPARATION FOR TRENCHES UNDER SLAB-ON-GRADE

2 TYPICAL DETAIL FOR TRENCH BACKFILL AT EDGE OF BUILDING
NO SCALE

GENERAL SUBGRADE NOTES AND TYP DETAILS - CONT
S-031
FOR BLUEBEAM LABELING/OCR:

File Path: C:\Users\escarfo\Documents\20380_FISD CLINE ES_STR_R21_emily.scarfo.rvt

CHECKED BY:
Checker
DRAWN BY:
Author
Plot Stamp:
1/11/2022 6:32:44 PM

PBK

ARCHITECT PBK Architects, Inc.
HOUSTON PBK.com
11 Greenway Plaza, 22nd Floor
Houston, TX 77046
713-965-0608 P
713-961-4571 F
TX Firm: BR 1608

CIVIL
DIG ENGINEERS
T 713 940 3238
STRUCTURAL
KUBALA ENGINEERS
T 800 248 3674
MEPT
LEAF ENGINEERS
T 713 940 3300
FOOD SERVICES
FOODSERVICE DESIGN PROFESSIONALS
T 281 350 2323
BUILDING ENVELOPE
BEAM
T 713 940 3201

CLINE ELEMENTARY SCHOOL
CAMPUS REPLACEMENT

1550 WEST BOULEVARD, FRIENDSWOOD, TX 77546

ISSUE FOR CSP

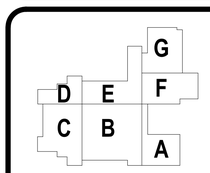

KEY PLAN
NORTH: PLAN TRUE

STATE OF TEXAS
JOHN R. KUBALA
106120
LICENSED PROFESSIONAL ENGINEER
01/12/2022
Kubala Engineers
F-3709

CLIENT
FRIENDSWOOD ISD

DATE	PROJECT NUMBER
DECEMBER 17, 2021	20380

DRAWING HISTORY

No.	Description	Date
1	ADDENDUM #1	01/12/2022

ISSUE FOR CSP

BUILDING NUMBER

GENERAL SUBGRADE NOTES AND TYP DETAILS - CONT

S-031

STRUCTURAL SITE PLAN

S-100S

FOR BLUEBEAM LABELING/OCR:

0"

1"

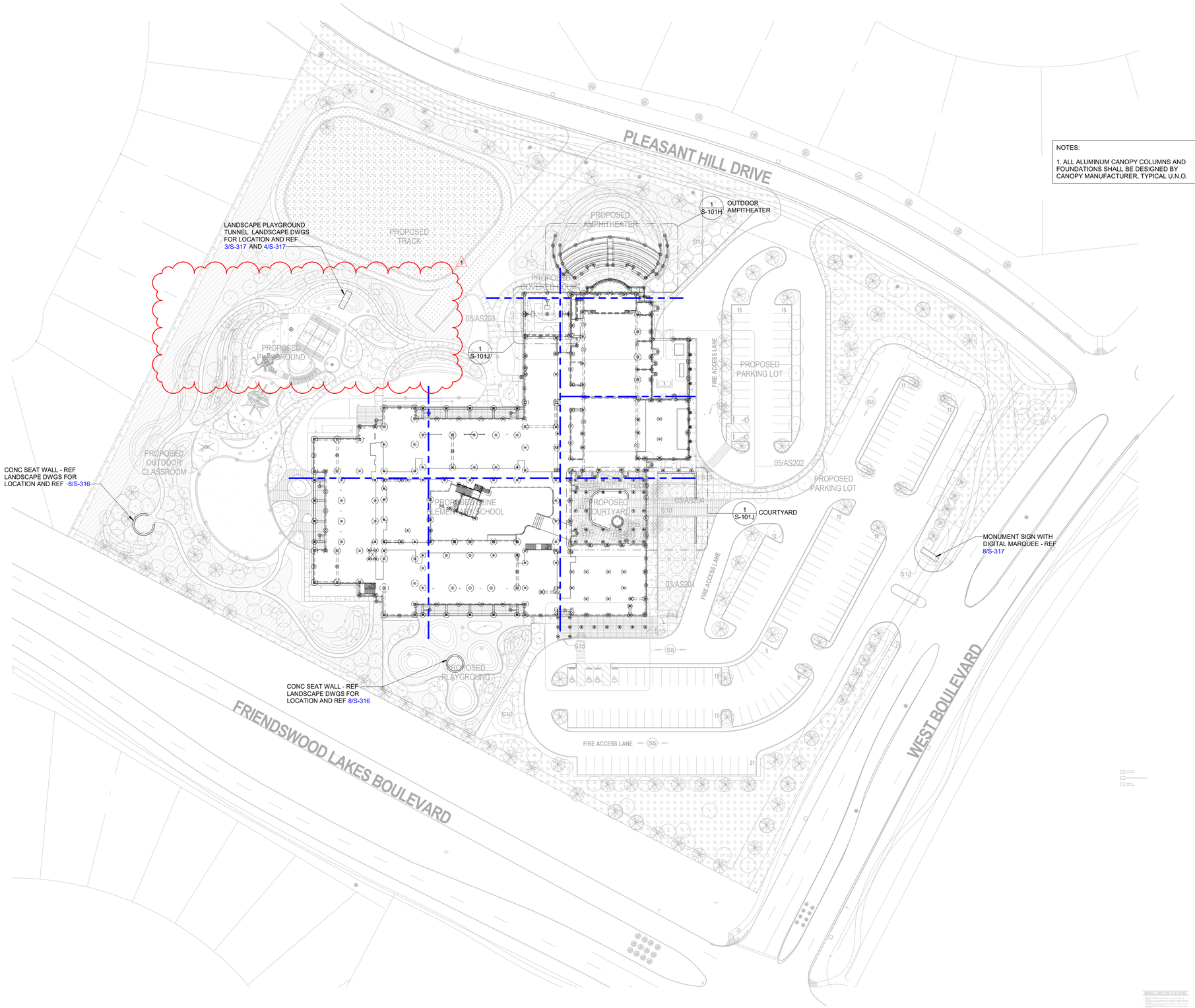

NOTES:

1. ALL ALUMINUM CANOPY COLUMNS AND FOUNDATIONS SHALL BE DESIGNED BY CANOPY MANUFACTURER, TYPICAL U.N.O.

1 STRUCTURAL SITE PLAN
1" = 50'-0"

Kubala ENGINEERS
Ph: 800.248.3674
www.kubalaengineers.com
TX. REG. NO. F-3709

PBK

ARCHITECT PBK Architects, Inc.
PBK.com
HOUSTON
11 Greenway Plaza, 22nd Floor
Houston, TX 77046
713-965-0608 P
713-961-4571 F
TX Firm: BR 1608

CIVIL
DIG ENGINEERS
T 713 940 3238
STRUCTURAL
KUBALA ENGINEERS
T 800 248 3674
MEPT
LEAF ENGINEERS
T 713 940 3300
FOOD SERVICES
FOODSERVICE DESIGN PROFESSIONALS
T 281 350 2323
BUILDING ENVELOPE
SEAM
T 713 940 3201

CLINE ELEMENTARY SCHOOL CAMPUS REPLACEMENT

1550 WEST BOULEVARD, FRIENDSWOOD, TX 77546

ISSUE FOR CSP

FRIENDSWOOD INDEPENDENT SCHOOL DISTRICT

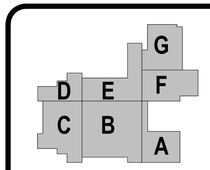

KEY PLAN

NORTH: PLAN TRUE

STATE OF TEXAS
JOHN R. KUBALA
106120
01/12/2022
Kubala Engineers
F-3709

CLIENT
FRIENDSWOOD ISD

DATE	PROJECT NUMBER
DECEMBER 17, 2021	20380

DRAWING HISTORY

No.	Description	Date
1	ADDENDUM #1	01/12/2022

ISSUE FOR CSP

BUILDING NUMBER

STRUCTURAL SITE PLAN

S-100S

File Path: C:\Users\escarfo\Documents\20380_FISD CLINE ES_STR_R21_emily.scarfo.rvt

CHECKED BY:
Checker
DRAWN BY:
Author
Plot Stamp:
1/11/2022 6:32:46 PM

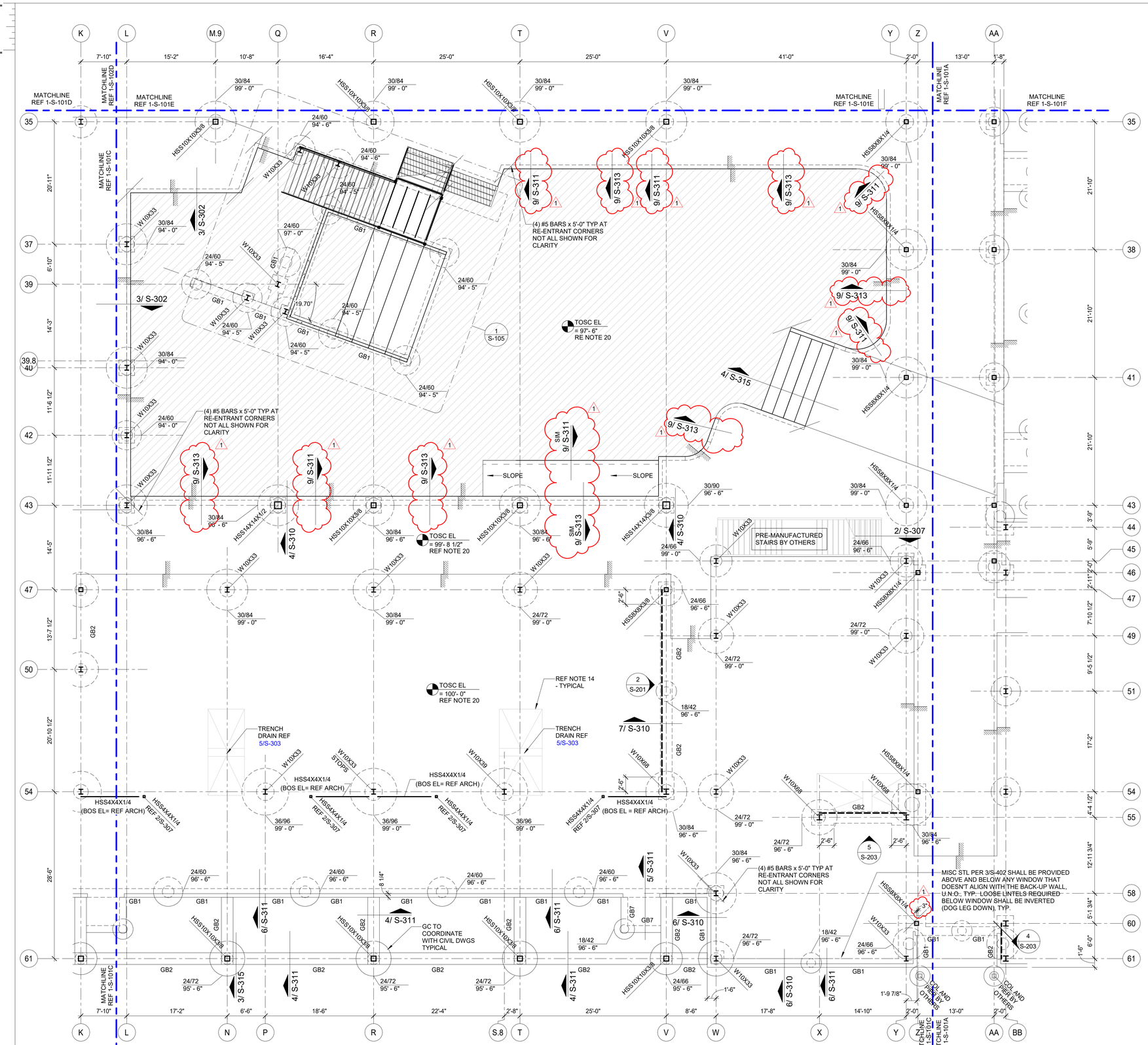

1 FOUNDATION AND 1ST LEVEL PLAN - AREA B
1/8" = 1'-0"

FOUNDATION PLAN NOTES

1. REFER TO PLAN FOR TOP OF STRUCTURAL CONCRETE ELEVATIONS (TOSC EL). ALL ELEVATIONS SHOWN ON THE PLAN ARE BASED ON A LEVEL ONE REFERENCE ELEVATION = 100'-0". THIS REFERENCE ELEVATION IS EQUIVALENT TO THE LEVEL ONE MEAN SEA LEVEL ELEVATION = REF CIVIL SHOWN IN THE CIVIL AND ARCHITECTURAL DRAWINGS AND IS NOT INTENDED TO ESTABLISH THE ACTUAL SEA LEVEL ELEVATION OF ANY PORTION OF THE STRUCTURE.
2. REFER TO ARCHITECTURAL DRAWINGS FOR EXTENTS AND DIMENSIONS OF RAISED OR DEPRESSED SLAB AREAS, SLOPES, CURBS, AND DRAINS. REFER TO TYPICAL DETAILS FOR REINFORCEMENT REQUIREMENTS.
3. REFER TO MECHANICAL, ELECTRICAL, AND PLUMBING DRAWINGS FOR SLAB PENETRATIONS AND UNDERGROUND UTILITIES. REFER TO TYPICAL DETAILS FOR ADDITIONAL REINFORCEMENT REQUIREMENTS.
4. CONTRACTOR TO FIELD VERIFY ALL EXISTING CONDITIONS AND DIMENSIONS. NOTIFY ARCHITECT AND STRUCTURAL ENGINEER OF ANY DISCREPANCIES.
5. CONTRACTOR TO VERIFY ALL SLAB EDGE DIMENSIONS WITH ARCHITECTURAL DRAWINGS PRIOR TO CONSTRUCTION.
6. PROVIDE (4) #5 x 5'-0" LONG BAR IN SLAB AT RE-ENTRANT CORNERS, TYPICAL. INCLUDING RE-ENTRANT CORNERS AROUND THE PERIMETER OF THE BUILDINGS, FLOOR RECESSES AND OPENINGS.
7. VERIFY THE SIZE AND EXTENT OF ALL BRICK LEDGES SHOWN ON PLAN OR DETAILS WITH ARCHITECTURAL DRAWINGS.
8. REF S0.xx SERIES DRAWINGS FOR GENERAL NOTES AND TYP DETAILS
9. REF S2.xx SERIES DRAWINGS FOR STEEL BRACE ELEVATIONS AND DETAILS.
10. REF S3.xx SERIES DRAWINGS FOR FOUNDATION AND SLAB-ON-GRADE DETAILS.
11. REF S4.xx SERIES DRAWINGS FOR CMU DETAILS.
12. REF PLAN FOR COLUMN SIZES.
13. UNLESS NOTED OTHERWISE ON PLAN, TOP OF PLINTH ELEVATION IS 99'-0".
14. REFER TO ARCH AND PLUMBING DWGS FOR THE SIZE, NUMBER AND LOCATION OF ALL THE TRENCHES, AND FLOOR DRAINS. REF 5/S-303 FOR TRENCH DETAIL AND REF 4/S-303 FOR FLOOR DRAIN DETAIL.
15. AT INTERIOR CMU WALL LOCATIONS, WHERE THE GRADE BEAM IS NOT SHOWN, PROVIDE SLAB TURNDOWN PER DETAIL 3/S-312; TYPICAL. AT INTERIOR GLAZING LOCATIONS, WHERE THE GRADE BEAM IS NOT SHOWN, PROVIDE DETAIL ; TYPICAL.
16. PIERS/FOOTIMGS WITHOUT CENTERLINES SHOWN ON PLANS, SECTIONS AND/OR DETAILS SHALL BE LOCATED AS FOLLOWS:
    A. COLUMNS AND PILASTERS: CENTERLINE OF THE COLUMN.
    B. GRADE BEAMS AND WALLS: CENTERLINE OF THE GRADE BEAM OR WALL.
    C. ALONG THE LENGTH OF GRADE BEAMS AND WALLS: INTERMEDIATE PIERS/FOOTINGS SHALL BE SPACED EQUALLY BETWEEN PIERS/FOOTINGS THAT ARE DIMENSIONALLY SET ON PLAN OR AS NOTED ABOVE.
    D. PIERS SUPPORTING SLABS ON CARTON FORMS: UNLESS NOTED OTHERWISE, PIERS NOT DIMENSIONED SHALL BE SPACED EQUALLY BETWEEN PIERS THAT ARE DIMENSIONALLY SET ON PLAN.
17. GC TO COORDINATE THE LOCATION OF ALL CONC CURBS WITH ARCH DWGS. REF 5/S-302 FOR DETAIL TYP
18. GC COORDINATE THE LOCATION OF ALL CANOPY COLUMNS WITH ARCH DRAWINGS.
19. ALL CMU SHOWN ON PLAN ARE PART OF THE STRUCTURAL LATERAL FORCE RESISTING SYSTEM AND SUPPORTS GRAVITY LOADS. NON-STRUCTURAL CMU EXISTS IN OTHER LOCATION (REF ARCH DWGS). A 3/8" VERT CONTROL JOINT SHALL BE PROVIDED WHEREVER STRUCTURAL AND NON-STRUCTURAL CMU ABUT.
20. 5" NW CONCRETE SLAB-ON-GRADE, REINFORCED WITH #3 AT 10" OC OR #4 AT 16" OC EACH WAY ON 3 1/2" CHAIRS SPACED AT 36" OC EACH WAY. PLACE THE SLAB ON 15 MIL WATER VAPOR BARRIER OVER COMPACTED SELECT FILL (SOIL REPORT). REF TO SLAB JOINT 1/S-302 AND 2/S-302
21. GC TO COORDINATE THE TOP OF PIER ELEVATION AT CANOPIES WITH CIVIL GRADES AND ARCH DRAWINGS. PROVIDE 2'-0" MIN COVER BELOW THE EXTERIOR FINISH GRADE.

*******GC NOTE*******
IT CAN BE COMMON PRACTICE FOR STEEL STUB-UPS WITH STRUCTURAL STEEL SILL SUPPORT MEMBERS TO BE PROVIDED AT LONG FIRST FLOOR WINDOW SILLS (REFERENCE DETAIL 6/S-311); HOWEVER, FOR FIRST FLOOR WINDOWS, 8'-0"AND NARROWER, THE GC SHALL PROVIDE PRE-ENGINEERED COLD-FROM SILL SUPPORTS UTILIZING COLD-FORM FRAMING ONLY. THESE COLD-FORM SILL SUPPORTS SHALL BE DESIGNED BY THE DRYWALL SUBCONTRACTOR'S ENGINEER AND SUBMITTED IN THE SHOP DRAWINGS FOR REVIEW. WHERE FIRST FLOOR WINDOW SILLS EXCEED 8'-0"THE CONTRACTOR SHALL PROVIDE MISC. STRUCTURAL STEEL PER 6/S-311 (TYP.)

PBK
ARCHITECT PBK Architects, Inc.
HOUSTON
11 Greenway Plaza, 22nd Floor
Houston, TX 77046
713-965-0608 P
713-961-4571 F
TX Firm: BR 1608
PBK.com
CIVIL
DIG ENGINEERS
T 713 940 3238
STRUCTURAL
KUBALA ENGINEERS
T 800 248 3674
MEPT
LEAF ENGINEERS
T 713 940 3300
FOOD SERVICES
FOODSERVICE DESIGN PROFESSIONALS
T 281 350 2323
BUILDING ENVELOPE
BEAM
T 713 940 3201

CLINE ELEMENTARY SCHOOL CAMPUS REPLACEMENT

1550 WEST BOULEVARD, FRIENDSWOOD, TX 77546

ISSUE FOR CSP

FRIENDSWOOD INDEPENDENT SCHOOL DISTRICT

KEY PLAN

G D E F C B A

NORTH: PLAN TRUE

STATE OF TEXAS
JOHN R. KUBALA
106120
LICENSED PROFESSIONAL ENGINEER
01/12/2022
Kubala Engineers
F-3709

CLIENT
FRIENDSWOOD ISD

DATE	PROJECT NUMBER
DECEMBER 17, 2021	20380

DRAWING HISTORY

No.	Description	Date
1	ADDENDUM #1	01/12/2022

ISSUE FOR CSP

BUILDING NUMBER

FOUNDATION AND 1ST LEVEL PLAN - AREA B

Kubala ENGINEERS
Ph: 800.248.3674
www.kubalaengineers.com
TX. REG. NO. F-3709

S-101B

FOUNDATION AND 1ST LEVEL PLAN - AREA B

S-101B

FOR BLUEBEAM LABELING/OCR:

File Path: C:\Users\escarfo\Documents\20380_FISD CLINE ES_STR_R21_emily.scarfo.rvt

CHECKED BY:
Checker
DRAWN BY:
Author
Plot Stamp:
1/11/2022 6:32:48 PM

FOUNDATION AND 1ST LEVEL PLAN - AMPHITHEATER & DUMPSTER

S-101H

FOR BLUEBEAM LABELING/OCR:

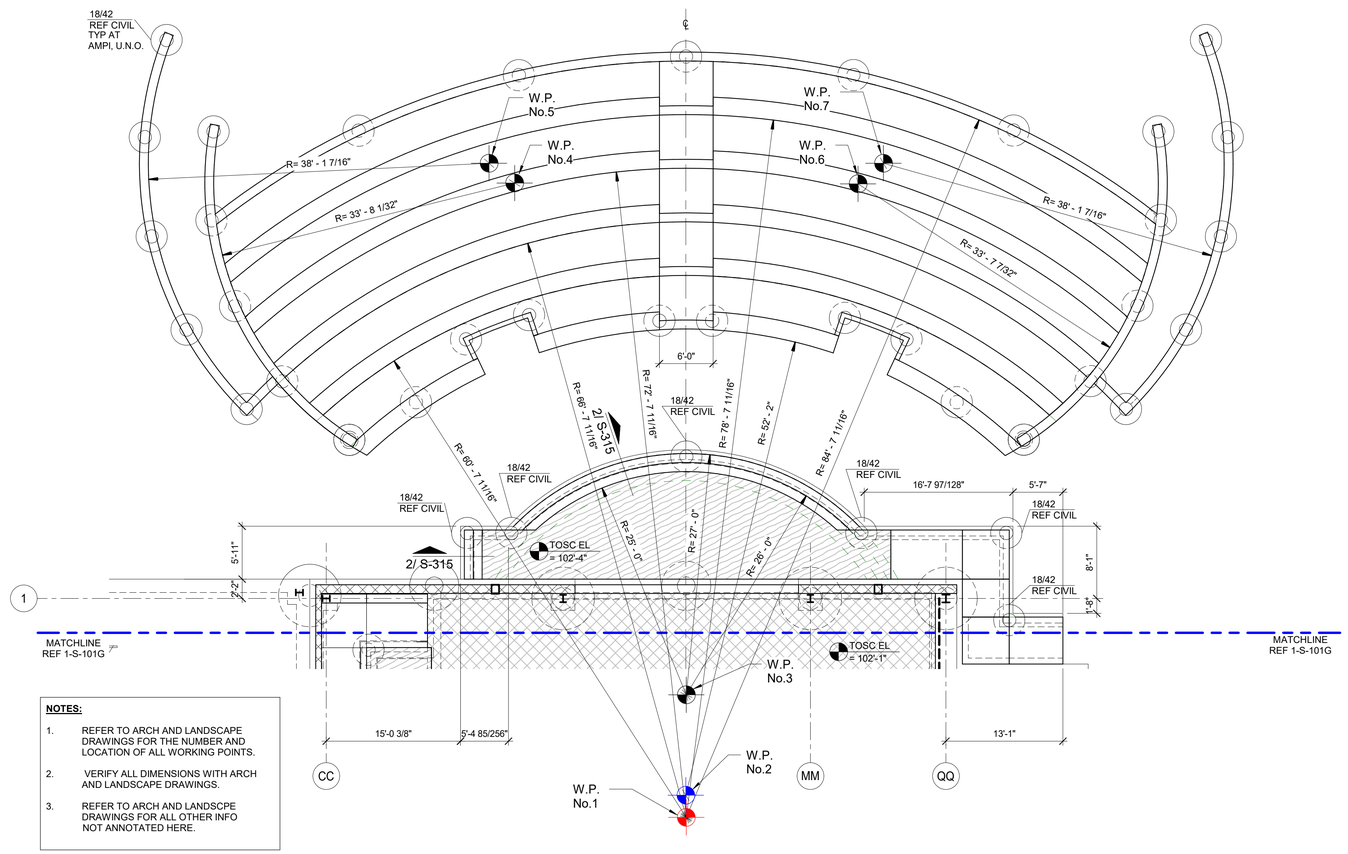

NOTES:

1. REFER TO ARCH AND LANDSCAPE DRAWINGS FOR THE NUMBER AND LOCATION OF ALL WORKING POINTS.
2. VERIFY ALL DIMENSIONS WITH ARCH AND LANDSCAPE DRAWINGS.
3. REFER TO ARCH AND LANDSCPE DRAWINGS FOR ALL OTHER INFO NOT ANNOTATED HERE.

1 FOUNDATION AND 1ST LEVEL PLAN - AMPHITHEATER

1/8" = 1'-0"

FOUNDATION PLAN NOTES

1. REFER TO PLAN FOR TOP OF STRUCTURAL CONCRETE ELEVATIONS (TOSC EL). ALL ELEVATIONS SHOWN ON THE PLAN ARE BASED ON A LEVEL ONE REFERENCE ELEVATION = 100'-0". THIS REFERENCE ELEVATION IS EQUIVALENT TO THE LEVEL ONE MEAN SEA LEVEL ELEVATION = REF CIVIL SHOWN IN THE CIVIL AND ARCHITECTURAL DRAWINGS AND IS NOT INTENDED TO ESTABLISH THE ACTUAL SEA LEVEL ELEVATION OF ANY PORTION OF THE STRUCTURE.
2. REFER TO ARCHITECTURAL DRAWINGS FOR EXTENTS AND DIMENSIONS OF RAISED OR DEPRESSED SLAB AREAS, SLOPES, CURBS, AND DRAINS. REFER TO TYPICAL DETAILS FOR REINFORCEMENT REQUIREMENTS.
3. REFER TO MECHANICAL, ELECTRICAL, AND PLUMBING DRAWINGS FOR SLAB PENETRATIONS AND UNDERGROUND UTILITIES. REFER TO TYPICAL DETAILS FOR ADDITIONAL REINFORCEMENT REQUIREMENTS.
4. CONTRACTOR TO FIELD VERIFY ALL EXISTING CONDITIONS AND DIMENSIONS. NOTIFY ARCHITECT AND STRUCTURAL ENGINEER OF ANY DISCREPANCIES.
5. CONTRACTOR TO VERIFY ALL SLAB EDGE DIMENSIONS WITH ARCHITECTURAL DRAWINGS PRIOR TO CONSTRUCTION.
6. PROVIDE (4) #5 x 5'-0" LONG BAR IN SLAB AT RE-ENTRANT CORNERS, TYPICAL. INCLUDING RE-ENTRANT CORNERS AROUND THE PERIMETER OF THE BUILDINGS, FLOOR RECESSES AND OPENINGS.
7. VERIFY THE SIZE AND EXTENT OF ALL BRICK LEDGES SHOWN ON PLAN OR DETAILS WITH ARCHITECTURAL DRAWINGS.
8. REF S0.xx SERIES DRAWINGS FOR GENERAL NOTES AND TYP DETAILS
9. REF S2.xx SERIES DRAWINGS FOR STEEL BRACE ELEVATIONS AND DETAILS.
10. REF S3.xx SERIES DRAWINGS FOR FOUNDATION AND SLAB-ON-GRADE DETAILS.
11. REF S4.xx SERIES DRAWINGS FOR CMU DETAILS.
12. REF PLAN FOR COLUMN SIZES.
13. UNLESS NOTED OTHERWISE ON PLAN, TOP OF PLINTH ELEVATION IS 99'-0".
14. REFER TO ARCH AND PLUMBING DWGS FOR THE SIZE, NUMBER AND LOCATION OF ALL THE TRENCHES, AND FLOOR DRAINS. REF 5/S-303 FOR TRENCH DETAIL AND REF 4/S-303 FOR FLOOR DRAIN DETAIL.
15. AT INTERIOR CMU WALL LOCATIONS, WHERE THE GRADE BEAM IS NOT SHOWN, PROVIDE SLAB TURNDOWN PER DETAIL 3/S-312; TYPICAL. AT INTERIOR GLAZING LOCATIONS, WHERE THE GRADE BEAM IS NOT SHOWN, PROVIDE DETAIL ; TYPICAL.
16. PIERS/FOOTIMGS WITHOUT CENTERLINES SHOWN ON PLANS, SECTIONS AND/OR DETAILS SHALL BE LOCATED AS FOLLOWS:
    A. COLUMNS AND PILASTERS: CENTERLINE OF THE COLUMN.
    B. GRADE BEAMS AND WALLS: CENTERLINE OF THE GRADE BEAM OR WALL.
    C. ALONG THE LENGTH OF GRADE BEAMS AND WALLS: INTERMEDIATE PIERS/FOOTINGS SHALL BE SPACED EQUALLY BETWEEN PIERS/FOOTINGS THAT ARE DIMENSIONALLY SET ON PLAN OR AS NOTED ABOVE.
    D. PIERS SUPPORTING SLABS ON CARTON FORMS: UNLESS NOTED OTHERWISE, PIERS NOT DIMENSIONED SHALL BE SPACED EQUALLY BETWEEN PIERS THAT ARE DIMENSIONALLY SET ON PLAN.
17. GC TO COORDINATE THE LOCATION OF ALL CONC CURBS WITH ARCH DWGS. REF 5/S-302 FOR DETAIL TYP
18. GC COORDINATE THE LOCATION OF ALL CANOPY COLUMNS WITH ARCH DRAWINGS.
19. ▨ ALL CMU SHOWN ON PLAN ARE PART OF THE STRUCTURAL LATERAL FORCE RESISTING SYSTEM AND SUPPORTS GRAVITY LOADS. NON-STRUCTURAL CMU EXISTS IN OTHER LOCATION (REF ARCH DWGS). A 3/8" VERT CONTROL JOINT SHALL BE PROVIDED WHEREVER STRUCTURAL AND NON-STRUCTURAL CMU ABUT.
20. 5" NW CONCRETE SLAB-ON-GRADE, REINFORCED WITH #3 AT 10" OC OR #4 AT 16" OC EACH WAY ON 3 1/2" CHAIRS SPACED AT 36" OC EACH WAY. PLACE THE SLAB ON 15 MIL WATER VAPOR BARRIER OVER COMPACTED SELECT FILL (SOIL REPORT). REF TO SLAB JOINT 1/S-302 AND 2/S-302
21. GC TO COORDINATE THE TOP OF PIER ELEVATION AT CANOPIES WITH CIVIL GRADES AND ARCH DRAWINGS. PROVIDE 2'-0" MIN COVER BELOW THE EXTERIOR FINISH GRADE.

1

Kubala ENGINEERS
Ph: 800.248.3674
www.kubalaengineers.com
TX. REG. NO. F-3709

PBK

ARCHITECT PBK Architects, Inc.
HOUSTON PBK.com
11 Greenway Plaza, 22nd Floor
Houston, TX 77046
713-965-0608 P
713-961-4571 F
TX Firm: BR 1608

CIVIL
DIG ENGINEERS
T 713 940 3238
STRUCTURAL
KUBALA ENGINEERS
T 800 248 3674
MEPT
LEAF ENGINEERS
T 713 940 3300
FOOD SERVICES
FOODSERVICE DESIGN PROFESSIONALS
T 281 350 2323
BUILDING ENVELOPE
BEAM
T 713 940 3201

CLINE ELEMENTARY SCHOOL CAMPUS REPLACEMENT

1550 WEST BOULEVARD, FRIENDSWOOD, TX 77546

ISSUE FOR CSP

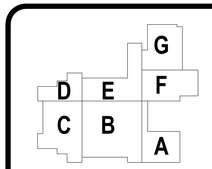

KEY PLAN

NORTH: PLAN TRUE

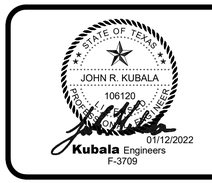

CLIENT
FRIENDSWOOD ISD

DATE	PROJECT NUMBER
DECEMBER 17, 2021	20380

DRAWING HISTORY

No.	Description	Date
1	ADDENDUM #1	01/12/2022

ISSUE FOR CSP

BUILDING NUMBER

FOUNDATION AND 1ST LEVEL PLAN - AMPHITHEATER & DUMPSTER

S-101H

File Path: C:\Users\escarfo\Documents\20380_FISD CLINE ES_STR_R21_emily.scarfo.rvt

CHECKED BY:
Checker
DRAWN BY:
Author
Plot Stamp:
1/11/2022 6:32:48 PM

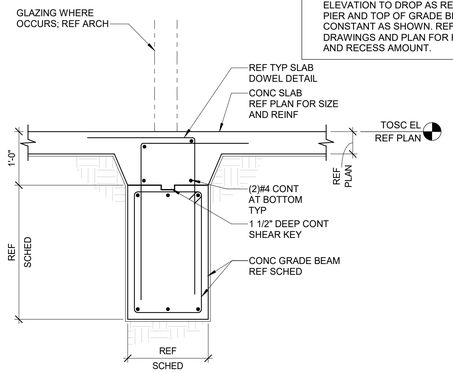

NOTE:

1. AT SIM. CONDITION FOR RECESS, SLAB ELEVATION TO DROP AS REQUIRED. TOP OF PIER AND TOP OF GRADE BEAM TO REMAIN CONSTANT AS SHOWN. REFER ARCH DRAWINGS AND PLAN FOR RECESS LOCATION AND RECESS AMOUNT.

1 INTERIOR GRADE BEAM AT GLAZING
NO SCALE

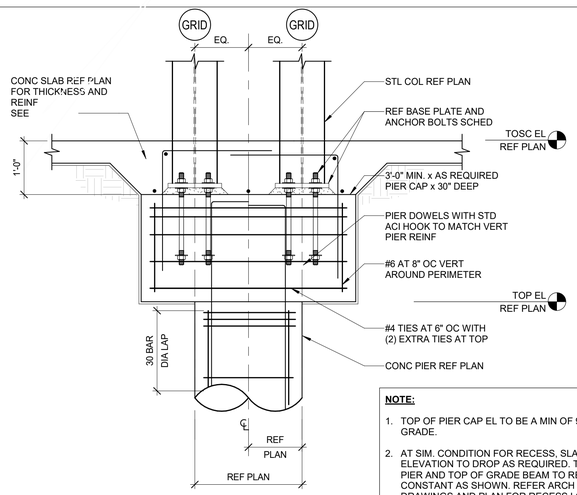

NOTE:

1. TOP OF PIER CAP EL TO BE A MIN OF 9" ABOVE GRADE.
2. AT SIM. CONDITION FOR RECESS, SLAB ELEVATION TO DROP AS REQUIRED. TOP OF PIER AND TOP OF GRADE BEAM TO REMAIN CONSTANT AS SHOWN. REFER ARCH DRAWINGS AND PLAN FOR RECESS LOCATION AND RECESS AMOUNT.

2 DOUBLE COLUMNS W/ONE PIER
NO SCALE

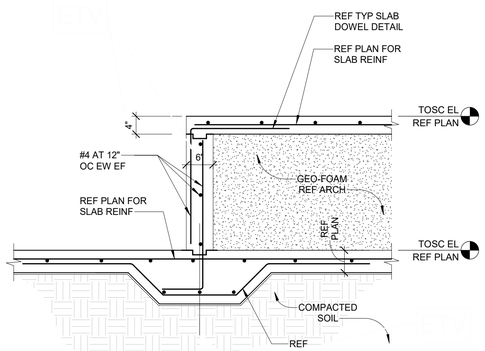

3 SECTION AT PLATFORM
NO SCALE

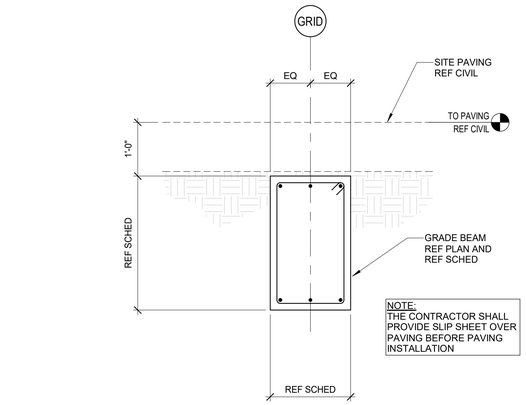

NOTE:
THE CONTRACTOR SHALL PROVIDE SLIP SHEET OVER PAVING BEFORE PAVING INSTALLATION

4 GRADE TIE BEAM AT PAVING
3/4" = 1'-0"

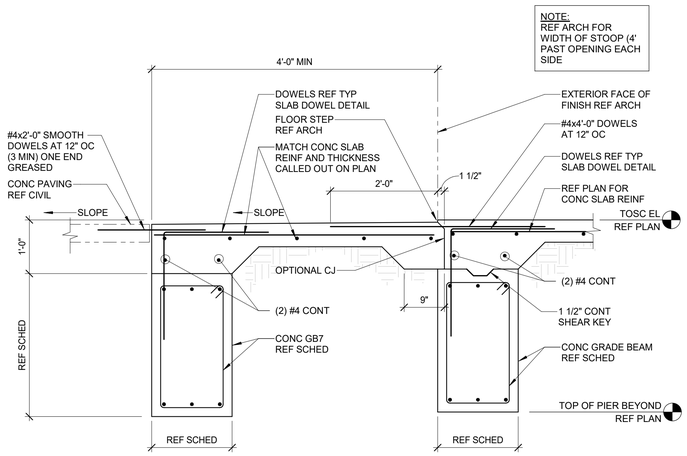

NOTE:
REF ARCH FOR WIDTH OF STOOP (4' PAST OPENING EACH SIDE

5 TYPICAL CONC SLAB-ON-GRADE STOOP AT EXTERIOR DOORS
3/4" = 1'-0"

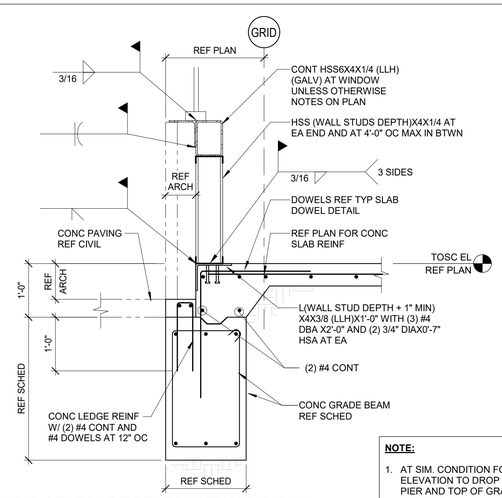

NOTE:

1. AT SIM. CONDITION FOR RECESS, SLAB ELEVATION TO DROP AS REQUIRED. TOP OF PIER AND TOP OF GRADE BEAM TO REMAIN CONSTANT AS SHOWN. REFER ARCH DRAWINGS AND PLAN FOR RECESS LOCATION AND RECESS AMOUNT.

6 FOUNDATION SECTION AT WINDOW
3/4" = 1'-0"

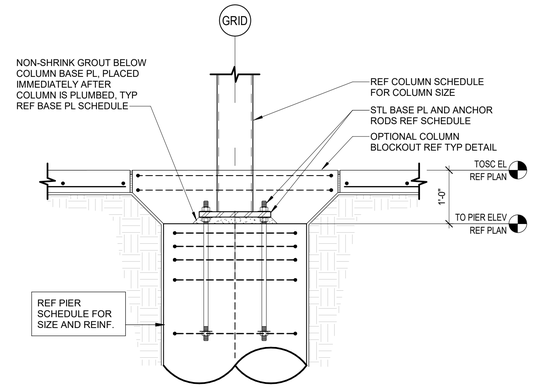

7 INTERIOR COLUMN AT PIER
3/4" = 1'-0"

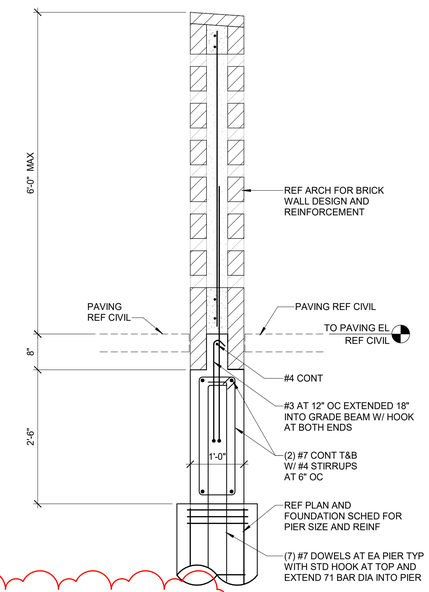

8 BRICK WALL AT COURTYARD
NO SCALE

REF 3/S-302 FOR INFO NOT SHOWN OR ANNOTATED HERE.

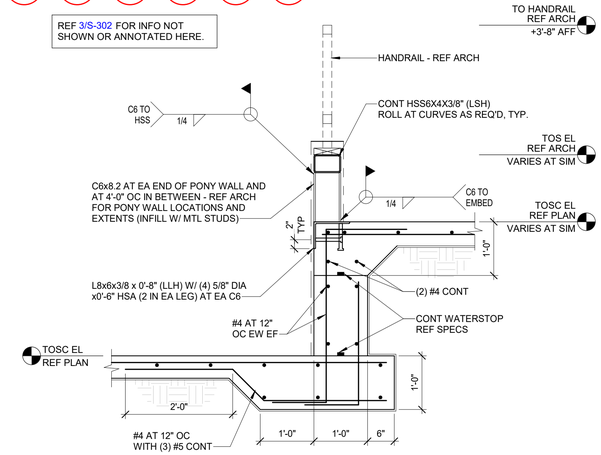

9 SECTION AT LEARNING COMMONS
NO SCALE

PBK
ARCHITECT
PBK Architects, Inc.
HOUSTON
PBK.com
11 Greenway Plaza, 22nd Floor
Houston, TX 77046
713-965-0608 P
713-961-4571 F
TX Firm: BR 1608
CIVIL
DIG ENGINEERS
T 713 940 3238
STRUCTURAL
KUBALA ENGINEERS
T 800 248 3674
MEP/T
LEAF ENGINEERS
T 713 940 3300
FOOD SERVICES
FOODSERVICE DESIGN PROFESSIONALS
T 281 350 2323
BUILDING ENVELOPE
BEAM
T 713 940 3201

CLINE ELEMENTARY SCHOOL CAMPUS REPLACEMENT

1550 WEST BOULEVARD, FRIENDSWOOD, TX 77546

ISSUE FOR CSP

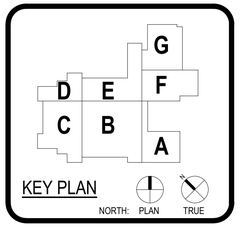

KEY PLAN
NORTH: PLAN TRUE

STATE OF TEXAS
JOHN R. KUBALA
106120
PROFESSIONAL ENGINEER
01/12/2022
Kubala Engineers
F-3709

CLIENT
FRIENDSWOOD ISD

DATE	PROJECT NUMBER
DECEMBER 17, 2021	20380

DRAWING HISTORY

No.	Description	Date
1	ADDENDUM #1	01/12/2022

ISSUE FOR CSP

BUILDING NUMBER

FOUNDATION DETAILS AND SECTIONS

S-311

Kubala ENGINEERS
Ph: 800.248.3674
www.kubalaengineers.com
TX. REG. NO. F-3709

File Path: C:\Users\escarfo\Documents\20380_FISD CLINE ES_STR_R21_emily.scarfo.rvt
CHECKED BY:
Checker
DRAWN BY:
Author
Plot Stamp:
1/11/2022 6:32:49 PM

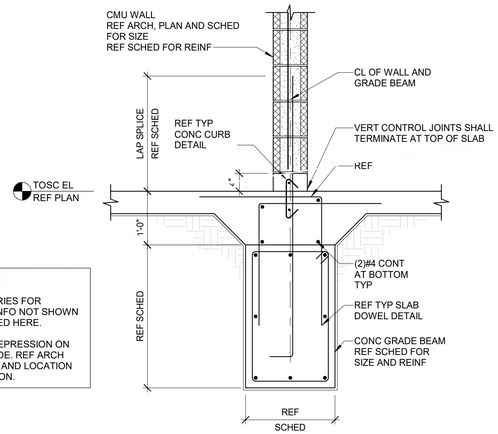

NOTES:

1. REF S-400 SERIES FOR ADDITIONAL INFO NOT SHOWN OR ANNOTATED HERE.
2. SIM MEANS DEPRESSION ON TERRAZZO SIDE. REF ARCH FOR AMOUNT AND LOCATION OF DEPRESSION.

1 INTERIOR CMU WALL AT INTERIOR GRADE BEAM W/CONC CURB
NO SCALE

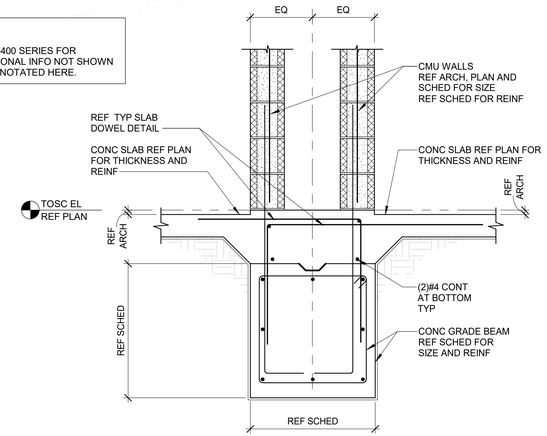

NOTES:

1. REF S-400 SERIES FOR ADDITIONAL INFO NOT SHOWN OR ANNOTATED HERE.

4 INTERIOR GRADE BEAM AT DOUBLE CMU WALLS W/RECESS ON BOTH SIDES
NO SCALE

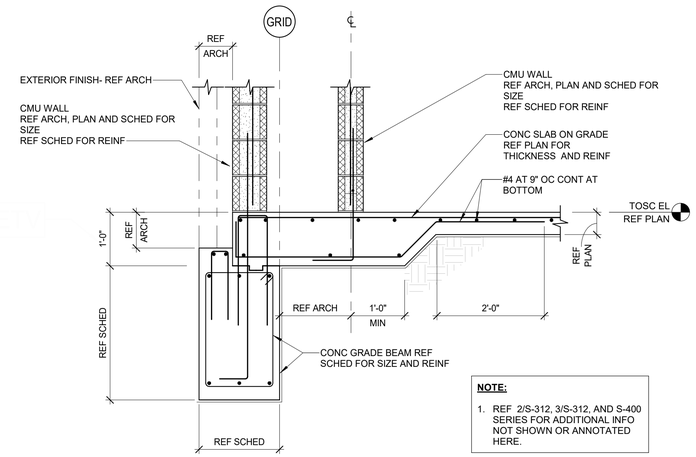

NOTE:

1. REF 2/S-312, 3/S-312, AND S-400 SERIES FOR ADDITIONAL INFO NOT SHOWN OR ANNOTATED HERE.

7 EXTERIOR GRADE BEAM AND THICKENED SLAB AT DOUBLE CMU WALLS
NO SCALE

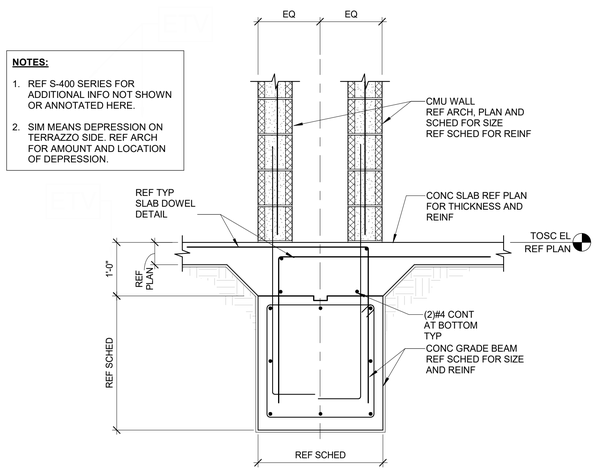

NOTES:

1. REF S-400 SERIES FOR ADDITIONAL INFO NOT SHOWN OR ANNOTATED HERE.
2. SIM MEANS DEPRESSION ON TERRAZZO SIDE. REF ARCH FOR AMOUNT AND LOCATION OF DEPRESSION.

2 INTERIOR GRADE BEAM AT DOUBLE CMU WALLS
NO SCALE

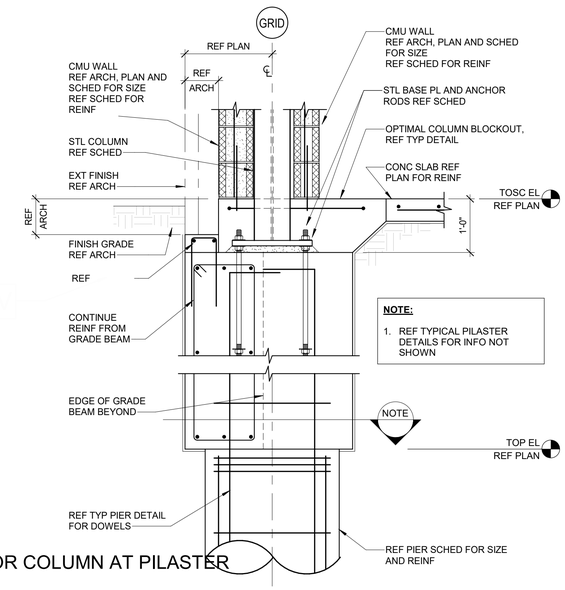

NOTE:

1. REF TYPICAL PILASTER DETAILS FOR INFO NOT SHOWN

5 EXTERIOR COLUMN AT PILASTER
NO SCALE

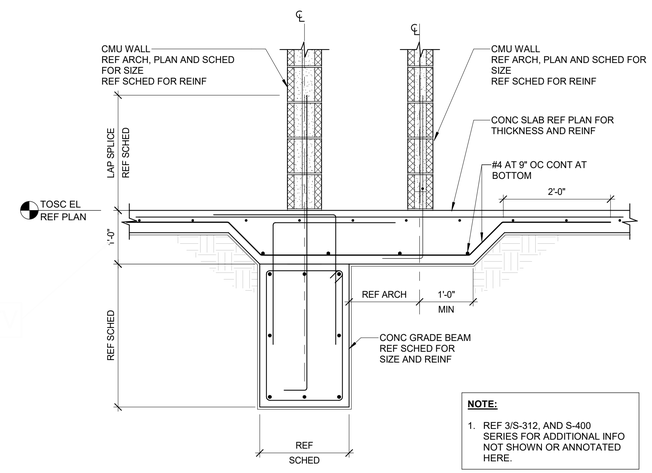

NOTE:

1. REF 3/S-312, AND S-400 SERIES FOR ADDITIONAL INFO NOT SHOWN OR ANNOTATED HERE.

8 INTERIOR GRADE BEAM AND THICKENED SLAB AT DOUBLE CMU WALLS
NO SCALE

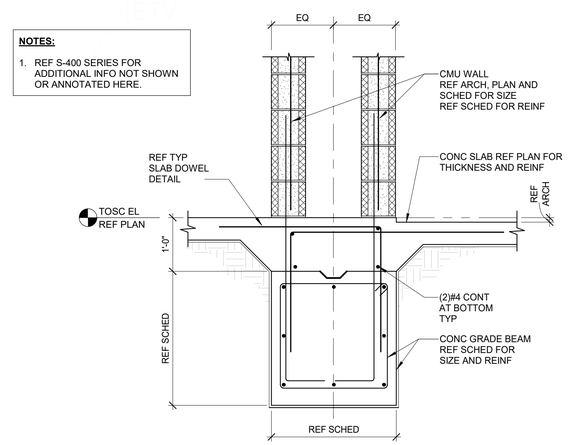

NOTES:

1. REF S-400 SERIES FOR ADDITIONAL INFO NOT SHOWN OR ANNOTATED HERE.

3 INTERIOR GRADE BEAM AT DOUBLE CMU WALLS W/ RECESS ON ONE SIDE
NO SCALE

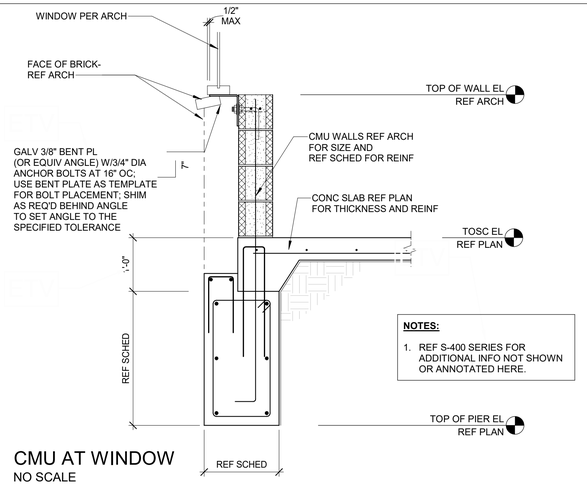

NOTES:

1. REF S-400 SERIES FOR ADDITIONAL INFO NOT SHOWN OR ANNOTATED HERE.

6 CMU AT WINDOW
NO SCALE

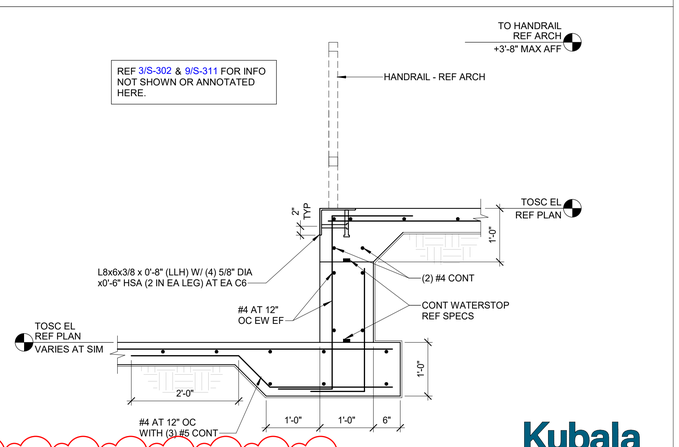

9 SECTION AT LEARNING COMMONS
NO SCALE

Kubala ENGINEERS
Ph: 800.248.3674
www.kubalaengineers.com
TX. REG. NO. F-3709

PBK

ARCHITECT
PBK Architects, Inc.
PBK.com
HOUSTON
11 Greenway Plaza, 22nd Floor
Houston, TX 77046
713-965-0608 P
713-961-4571 F
TX Firm: BR 1608

CIVIL
DIG ENGINEERS
T 713 940 3238
STRUCTURAL
KUBALA ENGINEERS
T 800 248 3674
MEP/T
LEAF ENGINEERS
T 713 940 3300
FOOD SERVICES
FOODSERVICE DESIGN PROFESSIONALS
T 281 350 2323
BUILDING ENVELOPE
BEAM
T 713 940 3201

CLINE ELEMENTARY SCHOOL CAMPUS REPLACEMENT

1550 WEST BOULEVARD, FRIENDSWOOD, TX 77546

ISSUE FOR CSP

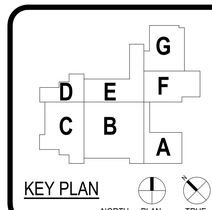

KEY PLAN
NORTH: PLAN TRUE

STATE OF TEXAS
JOHN R. KUBALA
106120
LICENSED PROFESSIONAL ENGINEER
01/12/2022
Kubala Engineers
F-3709

CLIENT
FRIENDSWOOD ISD

DATE	PROJECT NUMBER
DECEMBER 17, 2021	20380

DRAWING HISTORY

No.	Description	Date
1	ADDENDUM #1	01/12/2022

ISSUE FOR CSP

BUILDING NUMBER

FOUNDATION DETAILS AND SECTIONS

S-313

FOUNDATION DETAILS AND SECTIONS
S-313
FOR BLUEBEAM LABELING/OCR:

File Path: C:\Users\escarfo\Documents\20380_FISD CLINE ES_STR_R21_emily.scarfo.rvt

CHECKED BY:
Checker
DRAWN BY:
Author
Plot Stamp:
1/11/2022 6:32:49 PM

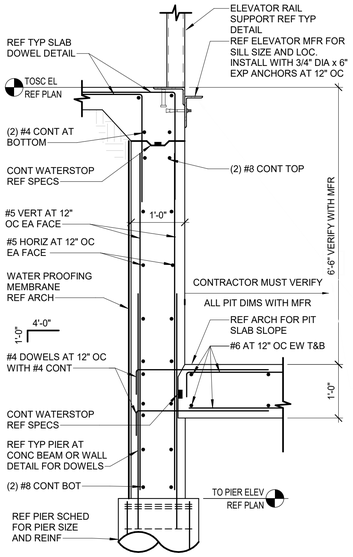

1 ELEVATOR PIT
3/4" = 1'-0"

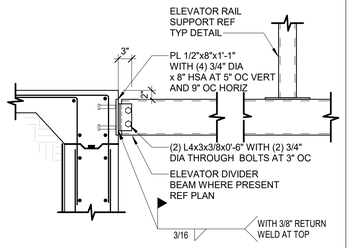

TYPICAL ELEVATOR DIVIDER BEAM AND GUIDE RAIL CONNECTION

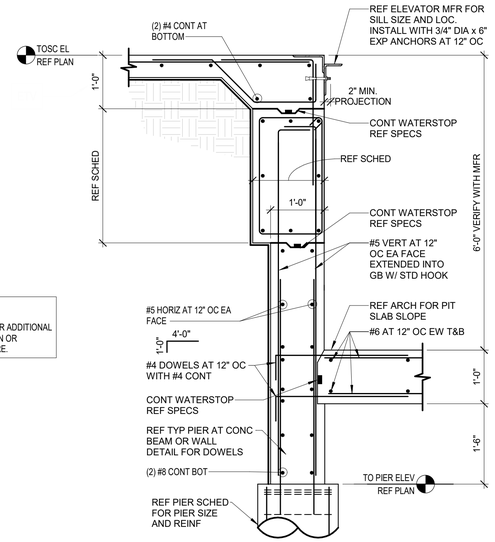

NOTES:

1. REF 1/S-318 FOR ADDITIONAL INFO NOT SHOWN OR ANNOTATED HERE.

2 ELEVATOR PIT AT GRADE BEAM
NO SCALE

Kubala ENGINEERS
Ph: 800.248.3674
www.kubalaengineers.com
TX. REG. NO. F-3709

PBK

ARCHITECT PBK Architects, Inc.
HOUSTON PBK.com
11 Greenway Plaza, 22nd Floor
Houston, TX 77046
713-965-0608 P
713-961-4571 F
TX Firm: BR 1608

CIVIL
DIG ENGINEERS
T 713 940 3238
STRUCTURAL
KUBALA ENGINEERS
T 800 248 3674
MEPT
LEAF ENGINEERS
T 713 940 3300
FOOD SERVICES
FOODSERVICE DESIGN PROFESSIONALS
T 281 350 2323
BUILDING ENVELOPE
BEAM
T 713 940 3201

CLINE ELEMENTARY SCHOOL CAMPUS REPLACEMENT

1550 WEST BOULEVARD, FRIENDSWOOD, TX 77546

ISSUE FOR CSP

FRIENDSWOOD INDEPENDENT SCHOOL DISTRICT

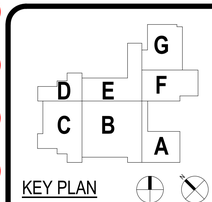

KEY PLAN
NORTH: PLAN TRUE

STATE OF TEXAS
JOHN R. KUBALA
106120
LICENSED PROFESSIONAL ENGINEER
01/12/2022
Kubala Engineers
F-3709

CLIENT
FRIENDSWOOD ISD

DATE	PROJECT NUMBER
DECEMBER 17, 2021	20380

DRAWING HISTORY

No.	Description	Date
1	ADDENDUM #1	01/12/2022

ISSUE FOR CSP

BUILDING NUMBER

ELEVATOR PIT DETAILS

S-318

ELEVATOR PIT DETAILS
S-318
FOR BLUEBEAM LABELING/OCR:

File Path: C:\Users\escarfo\Documents\20380_FISD CLINE ES_STR_R21_emily.scarfo.rvt

CHECKED BY:
Checker
DRAWN BY:
Author
Plot Stamp:
1/11/2022 6:32:49 PM

PBK

ARCHITECT PBK Architects, Inc.
HOUSTON PBK.com
11 Greenway Plaza, 22nd Floor
Houston, TX 77046
713-965-0608 P
713-961-4571 F
TX Firm: BR 1608

CIVIL
DIG ENGINEERS
T 713 940 3238
STRUCTURAL
KUBALA ENGINEERS
T 800 248 3874
MEP
LEAF ENGINEERS
T 713 940 3300
FOOD SERVICE
FOODSERVICE DESIGN PROFESSIONALS
T 281 350 2323
BUILDING ENVELOPE
BEAM
T 713 940 3201

CLINE ELEMENTARY SCHOOL CAMPUS REPLACEMENT

1550 WEST BOULEVARD, FRIENDSWOOD, TX 77546

ISSUE FOR CSP

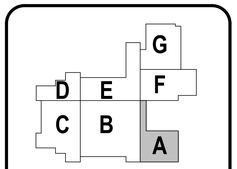

KEY PLAN

NORTH: PLAN TRUE

REGISTERED ARCHITECT MELISSA TURNBAUGH 41779 STATE OF TEXAS

Melissa Turnbaugh

Dec 17, 2021

CLIENT
FRIENDSWOOD ISD

DATE	PROJECT NUMBER
DECEMBER 17, 2021	20380

DRAWING HISTORY

No.	Description	Date
1	ADDENDUM #1	01/12/2022

ISSUE FOR CSP

BUILDING NUMBER

1ST LEVEL - SCHEDULES - AREA A

A-101A1

ROOM FINISH SCHEDULE

ROOM DATA №	ROOM DATA NAME	FLOOR FINISH	BASE FINISH	WALL FINISHES NORTH	EAST	SOUTH	WEST	CEILINGS FINISH	REMARKS
A100	VESTIBULE	CPT-4	RB-1	PT-1	PT-1	PT-1	PT-1	CL-1	
A101	CORRIDOR	TRZ-1	RB-1	PT-1	PT-1	PT-1	WT-1	CL-1	WEST WALL IS "CLINE MEMORY WALL"" REPURPOSED TILE TO BE APPLIED
A102	WAITING AREA	CPT-1	RB-1	PT-1	PT-1	PT-1	PT-1	CL-1	
A102A	RECEPTION	CPT-1	RB-1	PT-6	PT-6	PT-1	PT-1	CL-1	
A103	CLINIC	LVT-1	RB-1	PT-1	PT-1	PT-1	PT-1	CL-1	
A103A	OFFICE	LVT-1	RB-1	PT-1	PT-6	PT-1	PT-1	CL-1	
A103B	ISOLATION	LVT-1	RB-1	PT-1	PT-6	PT-1	PT-1	CL-1	
A103C	RR	EPF-1	RB-1	WT-1	WT-1	WT-1	WT-1	CL-3	REFERENCE RESTROOM ELEVATIONS FOR TILE LOCATIONS TYP.
A104	CORRIDOR	CPT-1	RB-1	PT-1	PT-1	PT-1	PT-1	CL-1	
A105	BREAKROOM	LVT-1	RB-1	PT-1	PT-1	PT-1	PT-6	CL-1	
A106	SMALL CONFERENCE ROOM	CPT-1	RB-1	PT-1	PT-1	PT-1	PT-6	CL-1	
A107	ELEC	SC-1	RB-1	PT-1	PT-1	PT-1	PT-1	-	
A108	OFFICE	CPT-1	RB-1	PT-1	PT-1	PT-1	PT-1	CL-1	
A109	PRINCIPAL RECEPTION	CPT-2	RB-1	PT-1	PT-1	PT-1	PT-6	CL-1	
A110	CORRIDOR	CPT-1	RB-1	PT-1	PT-1	PT-1	PT-1	CL-1	
A111	ADMIN ASSISTANT	CPT-1	RB-1	PT-1	PT-1	PT-1	PT-1	CL-1	
A112	PRINICPAL	CPT-1	RB-1	PT-1	PT-1	PT-1	PT-1	CL-1	
A113	ISS	CPT-1	RB-1	PT-1	PT-1	PT-1	PT-1	CL-1	
A114	ISS	CPT-1	RB-1	PT-1	PT-1	PT-1	PT-1	CL-1	
A115	ASSISTANT PRINCIPAL	CPT-1	RB-1	PT-1	PT-1	PT-1	PT-1	CL-1	
A116	VAULT / TEST STORAGE	SC-1	RB-1	PT-1	PT-1	PT-1	PT-1	CL-1	
A117	REGISTRAR	CPT-1	RB-1	PT-1	PT-1	PT-1	PT-1	CL-1	
A118	ARD	CPT-1	RB-1	PT-1	PT-1	PT-1	PT-1	CL-1	
A119	LARGE CONFERENCE ROOM	CPT-1	RB-1	PT-1	PT-1	PT-6	PT-1	CL-1	WS-1 ON SOUTH WALL FROM FLOOR TO 7'A.F.F.
A120	COUNSELOR RECEPTION	CPT-1	RB-1	PT-1	PT-1	PT-1	PT-1	CL-1	
A121	CORRIDOR	CPT-1	RB-1	PT-1	PT-1	PT-1	PT-1	CL-1	
A122	COUNSELOR	CPT-1	RB-1	PT-1	PT-1	PT-1	PT-1	CL-1	
A123	RR	EPF-1	EB-1	WT-1	WT-1	WT-1	WT-1	CL-3	REFERENCE RESTROOM ELEVATIONS FOR TILE LOCATIONS TYP.
A124	RR	EPF-1	EB-1	W1	W1	W1	W1	CL-3	REFERENCE RESTROOM ELEVATIONS FOR TILE LOCATIONS TYP.
A125	MDF	SC-1	RB-1	PT-1	PT-1	PT-1	PT-1	CL-1	PLYWOOD ON ALL WALLS
A126	STORAGE	SC-1	RB-1	PT-1	PT-1	PT-1	PT-1	CL-1	
A127	MOTHER'S ROOM	LVT-1	EB-1	PT-1	PT-1	PT-1	PT-1	CL-1	
A128	COMMUNITY ROOM / PTO	LVT-1	RB-1	PT-1	PT-1	PT-1	PT-6	CL-1	
A128A	STORAGE	SC-1	RB-1	PT-1	PT-1	PT-1	PT-1	CL-1	

MATERIAL FINISH SCHEDULE

FLOORS:

LUXURY VINYL TILE	LVT-1	PATCRAFT; LINOCUT; MIRROR; 9"X36" (CLINIC, ISOLATION ROOM, OFFICES, MOTHERS ROOM, ART, LIFE SKILLS, ECSC & COACH OFFICE)
	LVT-2	(INNOVATION LAB, LIBRARY WORKROOM, MAKERSPACE)
	LVT-3	ALTERNATE #3, IN LIEU OF TRZ-1, MOHAWK MATUTO STONE FROST BITE STONE
	LVT-4	ATLERNATE #3, IN LIEU OF TRZ-2, MOHAWK MATUTO STONE SONIC SILVER STONE
	LVT-5	ALTERNATE #3, IN LIEU OF TRZ-3, MOHAWK MATUTO STONE BLUE NIGHT STONE
ATHLETIC FLOORING	AF-1	TARKETT SPORTS; OMNI SPORTS 8.1MM ACTIVE PLACE; CLASSIC OAK (GYM FIELD)
	AF-2	TARKETT SPORTS; OMNI SPORTS 8.1MM ACTIVE PLUS; BLUE MAPLE (GYM BORDER)
CARPET	CPT-1	SHAW CONTRACT; SHIFTING FIELD ENCLAVE TILE; STONE; 18"X36" (CLASSROOM, COLLAB FIELD & ADMIN)
	CPT-2	SHAW CONTRACT; SHIFTING FIELD ENCLAVE TILE: RESERVOIR: 18"X36" (COLLAB & CORRIDOR ACCENT)
	CPT-3	SHAW CONTRACT; CUT AND COMPOSE COPY TILE; SECTOR; 24"X24" (LIBRARY)
	CPT-4	SHAW CONTRACT; ALL ACCESS SWIFT; STEP 14549; 24"X24" (WALK OFF MAT)
SEALED CONCRETE	SC-1	STORAGE
EPOXY	EPF-1	STONHARD; STONSHIELD; ASH (RESTROOMS AND KITCHEN)
TERRAZZO	TRZ-1	TERRAZZO MARBLE & SUPPLY; SAND BED, TM21GG-790; INTEGRAL TERRAZZO BASE(FIELD)
	TRZ-2	TERRAZZO MARBLE & SUPPLY; SAND BED, TM20GG-1237; INTEGRAL TERRAZZO BASE (GRAY ACCENT)
	TRZ-3	TERRAZZO MARBLE & SUPPLY; EPOXY, TM20GG-1239; INTEGRAL TERRAZZO BASE (BLUE ACCENT)
WOOD	WD-1	NYDREEE; PLAINSAWN WHITE OAK; ANTIQUE BARREL; 5 1/4" (LEARNING STAIRS)

BASE:

RUBBER BASE	RB-1	ROPPE; BLACK BROWN; 4" (FIELD)
EPOXY BASE	EB-1	STONHARD; STONSHIELD; ASH; INTEGRAL EPOXY BASE (RESTROOMS AND KITCHEN)
TERRAZZO BASE	TRZ-1	MATCH TERRAZZO FLOOR COLOR, U.N.O.
SCHLUTER EDGE TRIM	SCH-1	PER SPECS

CEILINGS:

CL-1	ACT-1 ROCKFON; EDUCATION PLUS SQUARE; WHITE 42100 (FIELD)	
CL-2	ACT-2 ROCKFON; KORAL (KITCHEN)	
CL-3	PAINTED GYPSUM; MOISTURE-RESISTANT GYP BD AT ANY WET LOCATIONS	1
ROOF DECK	MC-1	1 EPIC METALS; COLONY MAPLE

CASEWORK:

PLASTIC LAMINATE	PL-1	WILSONART; 7996-36; NATURAL RECON (DOORS, CASEWORK & PSI WALL PANELS)
	PL-2	WILSONART; 4877-38; GREY MESH (COUNTERTOP)
	PL-3	FORMICA; 914-58; MARINE BLUE (WALL PANELS)
SOLID SURFACE	SS-1	CORIAN; CAMEO WHITE (TOP CAP OF LOW WALLS)
QUARTZ	QTZ-1	WILSONART; Q4011; ARASHI (COUNTERTOPS & WINDOW SILLS)

RAILINGS:

INFILL PANEL	R-1	BANKER; M13Z-145; FACTORY POWDER COATED FINISH (INTERIOR AND EXTERIOR GUARDRAIL & STAIR RISER AS NOTED), FINISH COLOR TBD

SPECIALTY PRODUCTS:

TOILET PARTITIONS	TP-1	SCRANTON; CHARCOAL GREY; ORANGE PEEL (TOILET PARTITIONS)
LOCKERS	L-1	LIST INDUSTRIES; 717 GRAND SLAM (KITCHEN LOCKERS)
WALL PADS	SP-1	COLOR TBD
WALL GRAPHIC	SP-5	TBD
MOTORIZED SHADES	MS-1	SHADE FABRIC COLOR TBD

WALLS:

PAINT	PT-1	SHERWIN WILLIAMS; SW7028; INCREDIBLE WHITE (FIELD)
	PT-2	SHERWIN WILLIAMS; SW7064; PASSIVE (ACCENT)
	PT-3	SHERWIN WILLIAMS; SW7650; ELLIE GRAY (ACCENT)
	PT-4	SHERWIN WILLIAMS; SW6991; BLACK MAGIC (DOOR FRAMES, WINDOW FRAMES & EXPOSED CEILING)
	PT-5	SHERWIN WILLIAMS; SW6493; EBBTIDE; LIGHT BLUE(ACCENT)
	PT-6	SHERWIN WILLIAMS; SW6804; DIGNITY BLUE; BLUE (SPIRIT COLOR)
VINYL WALL COVERING	VWC-1	KOROSEAL; DESERT SAND; LIGHT FOG (CLASSROOM FIELD)
	VWC-2	KOROSEAL; DESERT SAND; WASHED DENIM (CLASSROOM & CORRIDOR ACCENT)
	VWC-3	HUFFCOR; VINYL DESIGNER COLLECTION GEM PATTERNL; EGGSHELL 44-701 (BETWEEN CAFETERIA & GYM)
WRITABLE SURFACE	WS-1	KOROSEAL; MAG RITE NATURAL WHITE 59"; NATURAL WHITE (CLASSROOM & COLLABORATION)
TACKWALL	TW-1	TACKWALL; DIGNITY BLUE (CORRIDORS)
	TW-2	TACKWALL; 64227 2001 (COLLAB AREAS)
CORNER GUARD	CG-1	PER SPECS

FABRIC:

ACOUSTICAL WALL PANEL	AWP-1	AUTEX; CUBE; MURALLA; BLUE (GYM & CAFETERIA)
	AWP-2	AUTEX; CUBE; FALLING WATER; LIGHT BLUE (GYM & CAFETERIA)
	AWP-3	AUTEX; CUBE; SAVOYE; LIGHT GRAY (CAFETERIA)
STAGE CURTAINS	STG-1	KM FABRICS; MEMORABLE; 1053 (STAGE CURTAIN)
TACKBOARDS	TW-1	CARNEGIE; XOREL; 6427 751 (TACBOARD FOR CORRIDORS)
	TW-2	CARNEGIE; XOREL; 6427 2001 (TACKBOARD FOR COLLABORATION AREAS)
BAFFLES	AB-1	AUTEX; FRONTIER BAFFLES RAFT BLADE; EMPIRE (GYM CEILING)

TILE:

PORCELAIN TILE	WT-1	TRINITY TILE; ALTA; WHITE; 12"X24" (RESTROOM FIELD)
	WT-2	TRINITY TILE; ALTA; BLUE POLISHED; 12"X24" (RESTROOM ACCENT, CAFETERIA)
	WT-3	TRINITY TILE; ALTA; BLUE MATTE; 12"X24" (RESTROOM ACCENT)
	WT-4	TRINITY TILE; ALTA; BLUE POLISHED; 6"X24" (RESTROOM ACCENT)
	WT-5	TRINITY TILE; ALTA; BLUE MATTE; 6"X24" (RESTROOM ACCENT)
	WT-6	ESMER; BB CONCRETE; MIST; 12"X24" (SERVING LINE BACK WALL)
MOSAIC WALL TILE	MWT-1	MARAZZI; COASTAL EFFECTS; SAPPHIRE; LARGE PICKET MOSAIC 1"X4"; 11 1/4"X11 1/4" SHEET; INSTALL VERTICAL (BREAKROOM & COMMUNITY ROOM BACKSPLASH)
	MWT-2	ESMER; H2O; NAVY; 12"X12" MOSAIC SHEET; INSTALL VERTICAL (SERVING LINE COUNTER)
GROUT	G-1	COLOR TBD
	G-2	COLOR TBD
	G-3	COLOR TBD

**ALL GROUT LINES MUST BE SEALED TO BE NON-ABSORBENT.

EXTERIOR MATERIALS:

BRICK	B-1	NORMAN SIZE BRICK; CRIMSON IRONSPOT SMOOTH 1
	B-2	NORMAN SIZE BRICK - EBONY IRONSPOT SMOOTH
METAL PANEL	MP-1	BERRIDGE HR-16 PANEL SYSTEM - AGED BRONZE
	MP-2	BERRIDGE HS-12 - AGED BRONZE
LOUVER SCREEN	R-1	RUSKIN EV211 - COLOR TBD
MANUFACTURED STONE	MST-1	ARRISCRAFT 8" x 24" AND 12" x 24"; OAKRIDGE SMOOTH
FIBERGLASS REINFORCED PLASTIC PANEL(FRP)	FRP-1	COLOR TBD (CUSTODIAL WALLS)

GENERAL NOTE

1. ALL FINISH MATERIALS SHALL MEET THE FLAME SPREAD RATINGS PER THE BUILDING CODE.
2. REFER TO INTERIOR ELEVATIONS FOR SPECIFIC MATERIAL LOCATIONS.
3. PAINT ALL EXPOSED STRUCT. MEMBERS, STRUCT. DECK, DUCTWORK, DIFFUSERS, PIPING, CONDUIT, EQUIP. HOUSINGS, LIGHT FIXTURE HOUSINGS, CABLE SUPPORTS, CABLE TRAYS, EQUIP. SUPPORTS, HANGERS, ETC. TO MATCH ADJACENT SURFACES.
4. PAINT ALL NON-FACTORY FINISHED EXPOSED METAL.
5. REFER TO TYPICAL FLOORING TRANSITION DETAILS FOR FLOORING MATERIAL TRANSITIONS.
6. ALL FLOORING TRANSITIONS AT DOORS SHALL BE LOCATED UNDER THE DOOR IN THE CLOSED POSITION, U.N.O.
7. PROTECT ALL FINISHED FLOORING SURFACES FROM DAMAGE DURING ALL CONSTRUCTION PHASES.
8. PROVIDE AND INSTALL BULLNOSE TRIM AT ALL TRANSITIONS FROM CERAMIC WALL TILE TO OTHER MATERIAL U.N.O.
9. REFER TO REFLECTED CEILING PLANS FOR CEILING HEIGHTS.
10. ALL ELECTRICAL DEVICE COVERS ARE TO BE WHITE U.N.O.
11. ALL CARPET PATTERNS TO RUN PARALLEL TO CORRIDOR, U.N.O.
12. PAINT ALL HOLLOW METAL DOOR FRAMES TO MATCH ADJACENT WALL COLOR U.N.O.
13. ALL EXPOSED SPRINKLER PIPING TO BE PAINTED. COLOR TBD

DOOR SCHEDULE - FIRST FLOOR AREA 'A'

MARK	DOOR PANEL SIZE W x H W	H	DOOR ELEVATION	DOOR MATERIAL	DOOR FRAME SIZE W x H W	H	FRAME ELEVATION	FRAME MATERIAL	DETAILS SILL	JAMB	HEAD	H.W.	FIRE RATING LABEL	REMARKS
A100A	6'-0"	7'-0"	D	AL	13'-8"	15'-2"	CW-1	AL	10/A-731	06/A-731	15/A-732	W714AM		
A100B	6'-0"	7'-0"	D	AL	13'-8"	15'-2"	CW-1	AL	10/A-731	06/A-731	15/A-732	CW714AM		5
A101A	6'-0"	6'-10"	D	AL	13'-8"	10'-0"	SF-1	AL	18/A-733	12/A-732	15/A-732	C710ACM		5
A101B	6'-0"	6'-10"	D	AL	13'-8"	10'-0"	SF-1	AL	18/A-733	12/A-732	15/A-732	710ACM		
A101C	12'-0"	12'-0"	F	STL	12'-0"	12'-0"	-	STL	04/A-733	04/A-732	09/A-732	002	2HR	MOTORIZED OVERHEAD GRILL
A102A	3'-0"	6'-10"	B	AL	19'-11 1/2"	10'-0"	SF-2	AL	15/A-731	12/A-732	15/A-732	C201AC		5
A102B	3'-0"	6'-10"	B	AL	19'-11 1/2"	10'-0"	SF-2	AL	15/A-731	12/A-732	15/A-732	C207A		5
A102C	3'-0"	6'-10"	E	WD	3'-4"	7'-0"	1	AL	18/A-733	04/A-732	09/A-732	C207		5
A103	3'-0"	7'-0"	E	WD	3'-4"	7'-0"	1	AL	18/A-733	04/A-732	09/A-732	203		
A103A	3'-0"	6'-10"	A	WD	3'-4"	7'-0"	3	AL	18/A-733	04/A-732	09/A-732	103		
A103B	3'-0"	6'-10"	A	WD	3'-4"	7'-0"	1	AL	18/A-733	04/A-732	09/A-732	403		
A103C	3'-0"	6'-10"	A	WD	3'-4"	7'-0"	1	AL	18/A-733	04/A-732	09/A-732	303		
A104A	3'-0"	6'-10"	A	WD	3'-4"	7'-0"	3	AL	18/A-733	04/A-732	09/A-732	C201C		5
A104B	3'-0"	6'-10"	E	WD	3'-4"	7'-0"	1	AL	18/A-733	04/A-732	09/A-732	103		
A105	3'-0"	6'-10"	A	WD	3'-4"	7'-0"	3	AL	18/A-733	04/A-732	09/A-732	503		
A106	3'-0"	6'-10"	A	WD	15'-0"	7'-0"	SF-3	AL	18/A-733	12/A-732	15/A-732	103		
A107	3'-0"	6'-10"	A	WD	3'-4"	7'-0"	1	AL	18/A-733	04/A-732	09/A-732	201		
A108	3'-0"	6'-10"	A	WD	3'-4"	7'-0"	3	AL	18/A-733	04/A-732	09/A-732	103		
A111	3'-0"	6'-10"	A	WD	3'-4"	7'-0"	3	AL	18/A-733	04/A-732	09/A-732	103		
A112	3'-0"	6'-10"	A	WD	3'-4"	7'-0"	3	AL	18/A-733	04/A-732	09/A-732	103		
A113	3'-0"	6'-10"	A	WD	3'-4"	7'-0"	3	AL	18/A-733	04/A-732	09/A-732	203		
A114	3'-0"	6'-10"	A	WD	3'-4"	7'-0"	3	AL	18/A-733	04/A-732	09/A-732	203		
A115	3'-0"	6'-10"	A	WD	3'-4"	7'-0"	3	AL	18/A-733	04/A-732	09/A-732	103		
A116	3'-0"	6'-10"	A	WD	3'-4"	7'-0"	1	AL	18/A-733	04/A-732	09/A-732	201		
A117	3'-0"	6'-10"	A	WD	3'-4"	7'-0"	3	AL	18/A-733	04/A-732	09/A-732	103		
A118	3'-0"	6'-10"	A	WD	3'-4"	7'-0"	3	AL	18/A-733	04/A-732	09/A-732	103		
A119	3'-0"	6'-10"	A	WD	3'-4"	7'-0"	3	AL	18/A-733	04/A-732	09/A-732	103		
A120	3'-0"	6'-10"	B	AL	8'-0"	10'-0"	SF-6	AL	10/A-731	07/A-731	17/A-732	CW205A		5
A121	3'-0"	6'-10"	A	WD	3'-4"	7'-0"	3	AL	18/A-733	04/A-732	09/A-732	201		
A122	3'-0"	6'-10"	A	WD	3'-4"	7'-0"	3	AL	18/A-733	04/A-732	09/A-732	103		
A123	3'-0"	6'-10"	A	WD	3'-4"	7'-0"	1	AL	18/A-733	04/A-732	09/A-732	303		
A124	3'-0"	6'-10"	A	WD	3'-4"	7'-0"	1	AL	18/A-733	04/A-732	09/A-732	303		
A125	3'-0"	6'-10"	A	WD	3'-4"	7'-0"	1	AL	18/A-733	04/A-732	09/A-732	C201C	2HR	5
A126	3'-0"	6'-10"	A	WD	3'-4"	7'-0"	1	AL	18/A-733	04/A-732	09/A-732	203		
A127	3'-0"	6'-10"	A	WD	3'-4"	7'-0"	1	AL	18/A-733	04/A-732	09/A-732	303		
A128	3'-0"	6'-10"	E	WD	3'-4"	7'-0"	1	AL	18/A-733	04/A-732	09/A-732	203		
A128A	3'-0"	6'-10"	A	WD	3'-4"	7'-0"	1	AL	18/A-733	04/A-732	09/A-732	203		
A128B	3'-6"	4'-0"	H	STL	3'-6"	4'-0"	--	STL	05/A-733	20/A-732	19/A-732	002	2HR	MOTORIZED OVER-COUNTER COILING DOOR
A128C	5'-0"	7'-0"	H	STL	7'-0"	4'-0"	--	STL	05/A-733	20/A-732	19/A-732	002		MOTORIZED OVER-COUNTER COILING DOOR
B100A	6'-0"	6'-10"	D	AL	58'-0"	12'-0"	CW-2	AL	10/A-731	07/A-731	15/A-732	CW714AM		5
B100B	6'-0"	6'-10"	D	AL	58'-0"	12'-0"	CW-2	AL	10/A-731	07/A-731	15/A-732	CW714AM		5

DOOR SCHEDULE REMARKS

1. PANIC EXIT HARDWARE
2. NOT AN ENTRY DOOR, EXIT ONLY DOOR WITH LOCKING OPERABLE HARDWARE ON SWING-OUT SIDE OF DOOR
3. NO LOCKING HARDWARE
4. ELEC. DOOR OPENER
5. ELEC. CONTROLLED ACCESS HARDWARE WITH CARD READER
6. ELEC. CONTROLLED ACCESS HARDWARE WITH PUSH-BUTTON
7. ELEC. CONTROLLED ACCESS HARDWARE, ROUGH-IN ONLY
8. KEYED REMOVABLE CENTER MULLION
9. CENTER ASTRAGAL
10. 180 DEGREE SWING
11. CONT. HINGE
12. WEATHER-STRIP SEAL
13. FIRE SMOKE SEAL
14. SOUND SEAL
15. PEEP HOLE
16. DOOR BUZZER
17. DOOR CHIME ON OPEN
18. MANUAL HOLD-OPEN
19. MAGNETIC HOLD-OPEN, CONNECT TO FIRE ALARM
20. MAGNETIC HOLD-OPEN, CONNECT TO SECURITY SYSTEM
21. NSULATED DOOR
22. SOUND RATED DOOR ASSEMBLY, STC AS SPECIFIED
23. WINDSTORM DOOR HARDWARE SHALL BE TESTED AS PART OF A COMPLETE DOOR OPENING ASSEMLBY. THE TESTED DOOR OPENING ASSEMBLY SHALL INCLUDE DOOR HARDWARE. THE ENTIRE DOOR OPENING, INCLUDING DOOR HARDWARE, SHALL BE BY DOOR MANUF.
24. ACOUSTICAL GLASS TO MEET FIRE DOOR ASSEMBLY REQUIREMENTS FOR FIRE RATING INDICATED
25. MANUAL PUSH-UP OPERATION
26. ELEC MOTOR OPERATION WITH KEY SWITCH CONTROL, KEY SWITCH ON ONE SIDE OF DOOR ONLY
27. ELEC MOTOR OPERATION WITH KEY SWITCH CONTROL, KEY SWITCH ON BOTH SIDES OF DOOR
28. ELEC MOTOR OPERATION WITH PUSH-BUTTON CONTROL ON ONE SIDE OF DOOR ONLY
29. PANIC EXIT PUSH-BUTTON ON ONE SIDE OF DOOR ONLY
30. AUTOMATIC OPEN ON FIRE ALARM ACTIVATION
31. AUTOMATIC CLOSE ON FIRE ALARM ACTIVATION
32. FAIL SAFE IN OPEN POSITION
33. FAIL SAFE IN CLOSED POSITION
34. MAXIMUM OCCUPANCY SIGNAGE NEAR DOOR
35. SIGNAGE ON DOOR TO READ "NOT AN EXIT"

GLAZING SCHEDULE - AREA A - FIRST FLOOR

MARK	FRAME WIDTH	HEIGHT	ELEVATION	FRAME MATERIAL	DETAILS SILL	JAMB	HEAD	REMARKS
A100	13'-1 1/4"	15'-2"	CW-1	ALUM	05/A-731	09/A-731	19/A-731	
A101	13'-8"	10'-0"	SF-1	ALUM	14/A-732	12/A-732 SIM	17/A-732	
A102	19'-11 1/2"	10'-0"	SF-2	ALUM	14/A-732	12/A-732	17/A-732	
A102B	10'-0"	6'-8"	SF-14	ALUM	02/A-731	07/A-731	12/A-731	2
A102C	10'-4"	5'-2"	SF-5	ALUM	13/A-732	12/A-732 SIM	17/A-732	
A102D	9'-2"	6'-2"	SF-4	ALUM	13/A-732	12/A-732 SIM	17/A-732	
A103	3'-0"	5'-2"	SF-13 SIM	ALUM	13/A-732	12/A-732 SIM	17/A-732	
A106	15'-0"	7'-0"	SF-3	ALUM	14/A-732	12/A-732	17/A-732	
A106B	12'-0"	6'-8"	SF-15 SIM	ALUM	02/A-731	08/A-731	12/A-731	2
A106C	4'-0"	6'-8"	SF-13 SIM	ALUM	02/A-731	08/A-731	12/A-731	2
A108	6'-0"	6'-8"	SF-13	ALUM	02/A-731	08/A-731	12/A-731	2
A111	4'-0"	6'-8"	SF-13 SIM	ALUM	02/A-731	08/A-731	12/A-731	2
A111B	4'-0"	6'-8"	SF-13 SIM	ALUM	02/A-731	08/A-731	12/A-731	2
A112	11'-11 1/4"	6'-8"	SF-15 SIM	ALUM	02/A-731	08/A-731	12/A-731	2
A112B	7'-5 3/4"	6'-8"	SF-13 SIM	ALUM	02/A-731	08/A-731	12/A-731	2
A112C	4'-0"	6'-8"	SF-13 SIM	ALUM	02/A-731	08/A-731	12/A-731	2
A113	4'-0"	6'-8"	SF-13 SIM	ALUM	02/A-731	08/A-731	12/A-731	2
A115	8'-0"	6'-8"	SF-13 SIM	ALUM	02/A-731	08/A-731	12/A-731	2
A117	4'-0"	6'-8"	SF-13 SIM	ALUM	02/A-731	08/A-731	12/A-731	2
A118	6'-0"	6'-8"	SF-13 SIM	ALUM	02/A-731	08/A-731	12/A-731	2
A119	8'-0"	6'-8"	SF-13 SIM	ALUM	02/A-731	07/A-731	12/A-731	2
A119B	8'-0"	6'-8"	SF-14 SIM	ALUM	02/A-731	07/A-731	12/A-731	2
A120	8'-0"	10'-0"	SF-6	ALUM	05/A-731	07/A-731	12/A-731	
A122	8'-0"	6'-8"	SF-14 SIM	ALUM	02/A-731	07/A-731	12/A-731	2
B100	58'-0"	12'-0"	CW-2	ALUM	05/A-731	09/A-731	19/A-731	

GLAZING SCHEDULE REMARKS

1. PROVIDE MOTORIZED WINDOW SHADES: REFER TO ELECTRICAL DRAWINGS
2. PROVIDE MANUALLY OPERATED WINDOW SHADES
3. REFER TO A-809 FOR FRAME ELEVATION

0"
1"

1ST LEVEL - SCHEDULES - AREA A
A-101A1
FOR BLUEBEAM LABELING/OCR:

C:_Revit\Local\20380_FISD CLINE ES_ARCH_R21_JiKim.rvt
File Path:

CHECKED BY:
DL
DRAWN BY:
Author
Plot Stamp:
1/12/2022 1:42:02 PM

PBK

ARCHITECT PBK Architects, Inc.
HOUSTON PBK.com
11 Greenway Plaza, 22nd Floor
Houston, TX 77046
713-965-0608 P
713-961-4571 F
TX Firm: BR 1608

CIVIL
DIG ENGINEERS
T 713 940 3238
STRUCTURAL
KUBALA ENGINEERS
T 800 248 3874
MEP
LEAF ENGINEERS
T 713 940 3300
FOOD SERVICE
FOODSERVICE DESIGN PROFESSIONALS
T 281 350 2323
BUILDING ENVELOPE
BEAM
T 713 940 3201

CLINE ELEMENTARY SCHOOL CAMPUS REPLACEMENT

1550 WEST BOULEVARD, FRIENDSWOOD, TX 77546

ISSUE FOR CSP

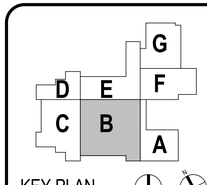

KEY PLAN

NORTH: PLAN TRUE

REGISTERED ARCHITECT MELISSA TURNBAUGH 21779 STATE OF TEXAS

Melissa Turnbaugh

Dec 17, 2021

CLIENT
FRIENDSWOOD ISD

DATE	PROJECT NUMBER
DECEMBER 17, 2021	20380

DRAWING HISTORY

No.	Description	Date
1	ADDENDUM #1	01/12/2022

ISSUE FOR CSP

BUILDING NUMBER

1ST LEVEL - SCHEDULES - AREA B

A-101B1

ROOM FINISH SCHEDULE

ROOM DATA №	NAME	FLOOR FINISH	BASE FINISH	WALL FINISHES NORTH	EAST	SOUTH	WEST	CEILINGS FINISH	REMARKS
B100	CORRIDOR	TRZ-1	RB-1	PT-1	PT-1	PT-1	PT-1	CL-1	REFERENCE RCP FOR CLOUD LOCATIONS
B101	STAIR B1	TRZ-1	RB-1	PT-1	PT-1	PT-1	PT-1	MC-1	TERRAZZO TREAD WITH WIRE MESH RISER
B102	STAIR A	TRZ-1	RB-1	PT-1	PT-1	PT-1	PT-1	MC-1	TERRAZZO TREAD WITH WIRE MESH RISER
B103	LEARNING COMMONS	CPT-2	RB-1	PT-1	PT-1	PT-1	PT-1	MC-1	
B104	STAIR B2	WD-1	RB-1	PT-1	PT-1	PT-1	PT-1	MC-1	WD-1 FINISH TREAD AND RISER
B105	LEARNING STAIR	WD-1	RB-1	PT-1	PT-1	PT-1	PT-1	MC-1	WD-1 FINISH TREAD AND RISER
B106	MAKER SPACE	CPT-1	RB-1	PT-1	PT-1	PT-1	W3	CL-1	
B107	LIBRARY WORKROOM	LVT-2	RB-1	PT-1	PT-1	PT-1	PT-1	CL-1	
B108	SENSORY ROOM	CPT-1	RB-1	VWC-1	VWC-1	VWC-1	VWC-1	CL-1	
B109	CORRIDOR	TZ-1	RB-1	PT-1	PT-1	PT-1	PT-1	CL-1	
B110	CORRIDOR	CPT-1	RB-1	PT-1	PT-1	PT-1	PT-1	CL-1	
B111	COLLABORATION	CPT-1	RB-1	PT-1	PT-1	5	PT-1	MC-1	
B111A	PORCH	-	-	-	-	-	-	MC-1	
B112	WORKROOM/ BREAKROOM	LVT-1	RB-1	PT-1	PT-1	PT-1	PT-1	CL-1	
B113	PRE-K	CPT-1	RB-1	VWC-1	WS-1	VWC-1	VWC-2	CL-1	LVT UNDER DRINKING FOUNTAIN
B113A	RR	EPF-1	EB-1	WT-1	WT-1	WT-1	WT-1	CL-3	REFERENCE RESTROOM ELEVATIONS FOR TILE LOCATIONS TYP.
B114	PRE-K	CPT-1	RB-1	VWC-1	WS-1	VWC-1	VWC-2	CL-1	LVT UNDER DRINKING FOUNTAIN
B114A	RR	EPF-1	EB-1	WT-1	WT-1	WT-1	WT-1	CL-3	REFERENCE RESTROOM ELEVATIONS FOR TILE LOCATIONS TYP.
B115	KINDERGARTEN	CPT-1	RB-1	VWC-1	WS-1	VWC-2	VWC-1	CL-1	LVT UNDER DRINKING FOUNTAIN
B115A	RR	EPF-1	EB-1	WT-1	WT-1	WT-1	WT-1	CL-3	REFERENCE RESTROOM ELEVATIONS FOR TILE LOCATIONS TYP.
B116	KINDERGARTEN	CPT-1	RB-1	VWC-1	VWC-1	VWC-2	WS-1	CL-1	LVT UNDER DRINKING FOUNTAIN
B116A	RR	EPF-1	EB-1	WT-1	WT-1	WT-1	WT-1	CL-3	REFERENCE RESTROOM ELEVATIONS FOR TILE LOCATIONS TYP.
B117	KINDERGARTEN	CPT-1	RB-1	VWC-1	WS-1	VWC-2	VWC-1	CL-1	LVT UNDER DRINKING FOUNTAIN
B117A	RR	EPF-1	EB-1	WT-1	WT-1	WT-1	WT-1	CL-3	REFERENCE RESTROOM ELEVATIONS FOR TILE LOCATIONS TYP.
B118	KINDERGARTEN	CPT-1	RB-1	VWC-1	VWC-1	VWC-2	WS-1	CL-1	LVT UNDER DRINKING FOUNTAIN
B118A	RR	EPF-1	EB-1	WT-1	WT-1	WT-1	WT-1	CL-3	REFERENCE RESTROOM ELEVATIONS FOR TILE LOCATIONS TYP.

MATERIAL FINISH SCHEDULE

FLOORS:

LUXURY VINYL TILE	LVT-1	PATCRAFT; LINOCUT; MIRROR; 9"X36" (CLINIC, ISOLATION ROOM, OFFICES, MOTHERS ROOM, ART, LIFE SKILLS, ECSC & COACH OFFICE)
	LVT-2	(INNOVATION LAB, LIBRARY WORKROOM, MAKERSPACE)
	LVT-3	ALTERNATE #3, IN LIEU OF TRZ-1, MOHAWK MATUTO STONE FROST BITE STONE
	LVT-4	ATLERNATE #3, IN LIEU OF TRZ-2, MOHAWK MATUTO STONE SONIC SILVER STONE
	LVT-5	ALTERNATE #3, IN LIEU OF TRZ-3, MOHAWK MATUTO STONE BLUE NIGHT STONE
ATHLETIC FLOORING	AF-1	TARKETT SPORTS; OMNI SPORTS 8.1MM ACTIVE PLACE; CLASSIC OAK (GYM FIELD)
	AF-2	TARKETT SPORTS; OMNI SPORTS 8.1MM ACTIVE PLUS; BLUE MAPLE (GYM BORDER)
CARPET	CPT-1	SHAW CONTRACT; SHIFTING FIELD ENCLAVE TILE; STONE; 18"X36" (CLASSROOM, COLLAB FIELD & ADMIN)
	CPT-2	SHAW CONTRACT; SHIFTING FIELD ENCLAVE TILE: RESERVOIR: 18"X36" (COLLAB & CORRIDOR ACCENT)
	CPT-3	SHAW CONTRACT; CUT AND COMPOSE COPY TILE; SECTOR; 24"X24" (LIBRARY)
	CPT-4	SHAW CONTRACT; ALL ACCESS SWIFT; STEP 14549; 24"X24" (WALK OFF MAT)
SEALED CONCRETE	SC-1	STORAGE
EPOXY	EPF-1	STONHARD; STONSHIELD; ASH (RESTROOMS AND KITCHEN)
TERRAZZO	TRZ-1	TERRAZZO MARBLE & SUPPLY; SAND BED, TM21GG-790; INTEGRAL TERRAZZO BASE(FIELD)
	TRZ-2	TERRAZZO MARBLE & SUPPLY; SAND BED, TM20GG-1237; INTEGRAL TERRAZZO BASE (GRAY ACCENT)
	TRZ-3	TERRAZZO MARBLE & SUPPLY; EPOXY, TM20GG-1239; INTEGRAL TERRAZZO BASE (BLUE ACCENT)
WOOD	WD-1	NYDREEE; PLAINSAWN WHITE OAK; ANTIQUE BARREL; 5 1/4" (LEARNING STAIRS)

BASE:

RUBBER BASE	RB-1	ROPPE; BLACK BROWN; 4" (FIELD)
EPOXY BASE	EB-1	STONHARD; STONSHIELD; ASH; INTEGRAL EPOXY BASE (RESTROOMS AND KITCHEN)
TERRAZZO BASE	TRZ-1	MATCH TERRAZZO FLOOR COLOR, U.N.O.
SCHLUTER EDGE TRIM	SCH-1	PER SPECS

CEILINGS:

CL-1	ACT-1 ROCKFON; EDUCATION PLUS SQUARE; WHITE 42100 (FIELD)
CL-2	ACT-2 ROCKFON; KOBAL KITCHEN
CL-3	PAINTED GYPSUM; MOISTURE-RESISTANT GYP BD AT ANY WET LOCATIONS
ROOF DECK	MC-1 EPIC METALS; COLONY MAPLE

CASEWORK:

PLASTIC LAMINATE	PL-1	WILSONART; 7996-36; NATURAL RECON (DOORS, CASEWORK & PSI WALL PANELS)
	PL-2	WILSONART; 4877-38; GREY MESH (COUNTERTOP)
	PL-3	FORMICA; 914-58; MARINE BLUE (WALL PANELS)
SOLID SURFACE	SS-1	CORIAN; CAMEO WHITE (TOP CAP OF LOW WALLS)
QUARTZ	QTZ-1	WILSONART; Q4011; ARASHI (COUNTERTOPS & WINDOW SILLS)

RAILINGS:

INFILL PANEL	R-1	BANKER; M13Z-145; FACTORY POWDER COATED FINISH (INTERIOR AND EXTERIOR GUARDRAIL & STAIR RISER AS NOTED), FINISH COLOR TBD

SPECIALTY PRODUCTS:

TOILET PARTITIONS	TP-1	SCRANTON; CHARCOAL GREY; ORANGE PEEL (TOILET PARTITIONS)
LOCKERS	L-1	LIST INDUSTRIES; 717 GRAND SLAM (KITCHEN LOCKERS)
WALL PADS	SP-1	COLOR TBD
WALL GRAPHIC	SP-5	TBD
MOTORIZED SHADES	MS-1	SHADE FABRIC COLOR TBD

WALLS:

PAINT	PT-1	SHERWIN WILLIAMS; SW7028; INCREDIBLE WHITE (FIELD)
	PT-2	SHERWIN WILLIAMS; SW7064; PASSIVE (ACCENT)
	PT-3	SHERWIN WILLIAMS; SW7650; ELLIE GRAY (ACCENT)
	PT-4	SHERWIN WILLIAMS; SW6991; BLACK MAGIC (DOOR FRAMES, WINDOW FRAMES & EXPOSED CEILING)
	PT-5	SHERWIN WILLIAMS; SW6493; EBBTIDE; LIGHT BLUE(ACCENT)
	PT-6	SHERWIN WILLIAMS; SW6804; DIGNITY BLUE; BLUE (SPIRIT COLOR)
VINYL WALL COVERING	VWC-1	KOROSEAL; DESERT SAND; LIGHT FOG (CLASSROOM FIELD)
	VWC-2	KOROSEAL; DESERT SAND; WASHED DENIM (CLASSROOM & CORRIDOR ACCENT)
	VWC-3	HUFFCOR; VINYL DESIGNER COLLECTION GEM PATTERNL; EGGSHELL 44-701 (BETWEEN CAFETERIA & GYM)
WRITABLE SURFACE	WS-1	KOROSEAL; MAG RITE NATURAL WHITE 59"; NATURAL WHITE (CLASSROOM & COLLABORATION)
TACKWALL	TW-1	TACKWALL; DIGNITY BLUE (CORRIDORS)
	TW-2	TACKWALL; 64227 2001 (COLLAB AREAS)
CORNER GUARD	CG-1	PER SPECS

FABRIC:

ACOUSTICAL WALL PANEL	AWP-1	AUTEX; CUBE; MURALLA; BLUE (GYM & CAFETERIA)
	AWP-2	AUTEX; CUBE; FALLING WATER; LIGHT BLUE (GYM & CAFETERIA)
	AWP-3	AUTEX; CUBE; SAVOYE; LIGHT GRAY (CAFETERIA)
STAGE CURTAINS	STG-1	KM FABRICS; MEMORABLE; 1053 (STAGE CURTAIN)
TACKBOARDS	TW-1	CARNEGIE; XOREL; 6427 751 (TACBOARD FOR CORRIDORS)
	TW-2	CARNEGIE; XOREL; 6427 2001 (TACKBOARD FOR COLLABORATION AREAS)
BAFFLES	AB-1	AUTEX; FRONTIER BAFFLES RAFT BLADE; EMPIRE (GYM CEILING)

TILE:

PORCELAIN TILE	WT-1	TRINITY TILE; ALTA; WHITE; 12"X24" (RESTROOM FIELD)
	WT-2	TRINITY TILE; ALTA; BLUE POLISHED; 12"X24" (RESTROOM ACCENT, CAFETERIA)
	WT-3	TRINITY TILE; ALTA; BLUE MATTE; 12"X24" (RESTROOM ACCENT)
	WT-4	TRINITY TILE; ALTA; BLUE POLISHED; 6"X24" (RESTROOM ACCENT)
	WT-5	TRINITY TILE; ALTA; BLUE MATTE; 6"X24" (RESTROOM ACCENT)
	WT-6	ESMER; BB CONCRETE; MIST; 12"X24" (SERVING LINE BACK WALL)
MOSAIC WALL TILE	MWT-1	MARAZZI; COASTAL EFFECTS; SAPPHIRE; LARGE PICKET MOSAIC 1"X4"; 11 1/4"X11 1/4" SHEET; INSTALL VERTICAL (BREAKROOM & COMMUNITY ROOM BACKSPLASH)
	MWT-2	ESMER; H2O; NAVY; 12"X12" MOSAIC SHEET; INSTALL VERTICAL (SERVING LINE COUNTER)
GROUT	G-1	COLOR TBD
	G-2	COLOR TBD
	G-3	COLOR TBD

**ALL GROUT LINES MUST BE SEALED TO BE NON-ABSORBENT.

EXTERIOR MATERIALS:

BRICK	B-1	NORMAN SIZE BRICK CRIMSON IRONSPOT SMOOTH
	B-2	NORMAN SIZE BRICK - EBONY IRONSPOT SMOOTH
METAL PANEL	MP-1	BERRIDGE HR-16 PANEL SYSTEM - AGED BRONZE
	MP-2	BERRIDGE HS-12 - AGED BRONZE
LOUVER SCREEN	R-1	RUSKIN EV211 - COLOR TBD
MANUFACTURED STONE	MST-1	ARRISCRAFT 8" x 24" AND 12" x 24"; OAKRIDGE SMOOTH
FIBERGLASS REINFORCED PLASTIC PANEL(FRP)	FRP-1	COLOR TBD (CUSTODIAL WALLS)

GENERAL NOTE

1. ALL FINISH MATERIALS SHALL MEET THE FLAME SPREAD RATINGS PER THE BUILDING CODE.
2. REFER TO INTERIOR ELEVATIONS FOR SPECIFIC MATERIAL LOCATIONS.
3. PAINT ALL EXPOSED STRUCT. MEMBERS, STRUCT. DECK, DUCTWORK, DIFFUSERS, PIPING, CONDUIT, EQUIP. HOUSINGS, LIGHT FIXTURE HOUSINGS, CABLE SUPPORTS, CABLE TRAYS, EQUIP. SUPPORTS, HANGERS, ETC. TO MATCH ADJACENT SURFACES.
4. PAINT ALL NON-FACTORY FINISHED EXPOSED METAL.
5. REFER TO TYPICAL FLOORING TRANSITION DETAILS FOR FLOORING MATERIAL TRANSITIONS.
6. ALL FLOORING TRANSITIONS AT DOORS SHALL BE LOCATED UNDER THE DOOR IN THE CLOSED POSITION, U.N.O.
7. PROTECT ALL FINISHED FLOORING SURFACES FROM DAMAGE DURING ALL CONSTRUCTION PHASES.
8. PROVIDE AND INSTALL BULLNOSE TRIM AT ALL TRANSITIONS FROM CERAMIC WALL TILE TO OTHER MATERIAL U.N.O.
9. REFER TO REFLECTED CEILING PLANS FOR CEILING HEIGHTS.
10. ALL ELECTRICAL DEVICE COVERS ARE TO BE WHITE U.N.O.
11. ALL CARPET PATTERNS TO RUN PARALLEL TO CORRIDOR, U.N.O.
12. PAINT ALL HOLLOW METAL DOOR FRAMES TO MATCH ADJACENT WALL COLOR U.N.O.
13. ALL EXPOSED SPRINKLER PIPING TO BE PAINTED. COLOR TBD

DOOR SCHEDULE - FIRST FLOOR AREA 'B'

MARK	DOOR PANEL SIZE W x H W	H	DOOR ELEVATION	DOOR MATERIAL	DOOR FRAME SIZE W x H W	H	FRAME ELEVATION	FRAME MATERIAL	DETAILS SILL	JAMB	HEAD	H.W.	FIRE RATING LABEL	REMARKS
B107	6'-0"	6'-10"	C	WD	6'-4"	7'-0"	1	AL	18/A-733	04/A-732	09/A-732	212		
B108	3'-0"	6'-10"	A	WD	3'-4"	7'-0"	1	AL	18/A-733	04/A-732	09/A-732	203		
B110	6'-0"	6'-10"	D	WD	6'-4"	7'-0"	1	AL	18/A-733	04/A-732	15/A-732	700M		
B111A	5'-11 1/2"	7'-0 1/4"	D	AL	113'-10"	11'-10"	SF-20	AL	10/A-731	06/A-731	15/A-732	CW714AM		5
B111B	5'-11 1/2"	7'-0 1/4"	D	AL	113'-10"	11'-10"	SF-20	AL	10/A-731	06/A-731	15/A-732	CW714AM		5
B112	3'-0"	6'-10"	A	WD	3'-4"	7'-0"	1	AL	18/A-733	12/A-732	09/A-732	503S		
B113	9'-6"	7'-0"	G	AL	9'-7"	7'-0 1/2"	SF-7 OPP.	AL	18/A-733	12/A-732	17/A-732	001		OPERABLE GLASS PARTITION: RE:SPECS
B113A	3'-0"	6'-10"	A	WD	3'-4"	7'-0"	1	AL	18/A-733	04/A-732	09/A-732	403		
B114	9'-6"	7'-0"	G	AL	9'-7"	7'-0 1/2"	SF-7	AL	18/A-733	12/A-732	17/A-732	001		OPERABLE GLASS PARTITION: RE:SPECS
B114A	3'-0"	6'-10"	A	WD	3'-4"	7'-0"	1	AL	18/A-733	04/A-732	09/A-732	403S		
B115	3'-0"	6'-10"	A	WD	9'-4"	7'-0"	SF-7	AL	15/A-731	12/A-732	15/A-732	203		
B115A	3'-0"	6'-10"	A	WD	3'-4"	7'-0"	1	AL	18/A-733	04/A-732	09/A-732	403		
B115B	9'-6"	7'-0"	G	AL	9'-7"	7'-0 1/2"	SF-7 OPP.	AL	18/A-733	12/A-732	17/A-732	001		OPERABLE GLASS PARTITION: RE:SPECS
B116	3'-0"	6'-10"	A	WD	9'-6"	7'-0"	SF-7 OPP.	AL	15/A-731	12/A-732	15/A-732	203		
B116A	3'-0"	6'-10"	A	WD	3'-4"	7'-0"	1	AL	18/A-733	04/A-732	09/A-732	403S		
B116B	9'-6"	7'-0"	G	AL	9'-7"	7'-0 1/2"	SF-7	AL	18/A-733	12/A-732	17/A-732	001		OPERABLE GLASS PARTITION: RE:SPECS
B117	3'-0"	6'-10"	A	WD	9'-4"	7'-0"	SF-7	AL	15/A-731	12/A-732	15/A-732	203		
B117A	3'-0"	6'-10"	A	WD	3'-4"	7'-0"	1	AL	18/A-733	04/A-732	09/A-732	403S		
B117B	9'-6"	7'-0"	G	AL	9'-7"	7'-0 1/2"	SF-7 OPP.	AL	18/A-733	12/A-732	17/A-732	001		OPERABLE GLASS PARTITION: RE:SPECS
B118	3'-0"	6'-10"	A	WD	9'-6"	7'-0"	SF-7 OPP.	AL	15/A-731	12/A-732	15/A-732	203		
B118A	3'-0"	6'-10"	A	WD	3'-4"	7'-0"	1	AL	18/A-733	04/A-732	09/A-732	403		
B118B	9'-6"	7'-0"	G	AL	9'-7"	7'-0 1/2"	SF-7	AL	18/A-733	12/A-732	17/A-732	001		OPERABLE GLASS PARTITION: RE:SPECS

DOOR SCHEDULE REMARKS

1. PANIC EXIT HARDWARE
2. NOT AN ENTRY DOOR, EXIT ONLY DOOR WITH LOCKING OPERABLE HARDWARE ON SWING-OUT SIDE OF DOOR
3. NO LOCKING HARDWARE
4. ELEC. DOOR OPENER
5. ELEC. CONTROLLED ACCESS HARDWARE WITH CARD READER
6. ELEC. CONTROLLED ACCESS HARDWARE WITH PUSH-BUTTON
7. ELEC. CONTROLLED ACCESS HARDWARE, ROUGH-IN ONLY
8. KEYED REMOVABLE CENTER MULLION
9. CENTER ASTRAGAL
10. 180 DEGREE SWING
11. CONT. HINGE
12. WEATHER-STRIP SEAL
13. FIRE SMOKE SEAL
14. SOUND SEAL
15. PEEP HOLE
16. DOOR BUZZER
17. DOOR CHIME ON OPEN
18. MANUAL HOLD-OPEN
19. MAGNETIC HOLD-OPEN, CONNECT TO FIRE ALARM
20. MAGNETIC HOLD-OPEN, CONNECT TO SECURITY SYSTEM
21. NSULATED DOOR
22. SOUND RATED DOOR ASSEMBLY, STC AS SPECIFIED
23. WINDSTORM DOOR HARDWARE SHALL BE TESTED AS PART OF A COMPLETE DOOR OPENING ASSEMLBY. THE TESTED DOOR OPENING ASSEMBLY SHALL INCLUDE DOOR HARDWARE. THE ENTIRE DOOR OPENING, INCLUDING DOOR HARDWARE, SHALL BE BY DOOR MANUF.
24. ACOUSTICAL GLASS TO MEET FIRE DOOR ASSEMBLY REQUIREMENTS FOR FIRE RATING INDICATED
25. MANUAL PUSH-UP OPERATION
26. ELEC MOTOR OPERATION WITH KEY SWITCH CONTROL, KEY SWITCH ON ONE SIDE OF DOOR ONLY
27. ELEC MOTOR OPERATION WITH KEY SWITCH CONTROL, KEY SWITCH ON BOTH SIDES OF DOOR
28. ELEC MOTOR OPERATION WITH PUSH-BUTTON CONTROL ON ONE SIDE OF DOOR ONLY
29. PANIC EXIT PUSH-BUTTON ON ONE SIDE OF DOOR ONLY
30. AUTOMATIC OPEN ON FIRE ALARM ACTIVATION
31. AUTOMATIC CLOSE ON FIRE ALARM ACTIVATION
32. FAIL SAFE IN OPEN POSITION
33. FAIL SAFE IN CLOSED POSITION
34. MAXIMUM OCCUPANCY SIGNAGE NEAR DOOR
35. SIGNAGE ON DOOR TO READ "NOT AN EXIT"

GLAZING SCHEDULE - AREA B - FIRST FLOOR

MARK	FRAME WIDTH	HEIGHT	ELEVATION	FRAME MATERIAL	DETAILS SILL	JAMB	HEAD	REMARKS
B111	113'-10"	11'-10"	SF-20	ALUM	01/A-731	06/A-731	13/A-731	
B114B	12'-0"	6'-8"	SF-15	ALUM	01/A-731	06/A-731	11/A-731	2
B115	9'-6"	7'-0"	SF-7	ALUM	14/A-732	12/A-732	17/A-732	
B116	9'-6"	7'-0"	SF-7	ALUM	14/A-732	12/A-732	17/A-732	
B117	9'-6"	7'-0"	SF-7	ALUM	14/A-732	12/A-732	17/A-732	
B118	9'-6"	7'-0"	SF-7	ALUM	14/A-732	12/A-732	17/A-732	

GLAZING SCHEDULE REMARKS

1. PROVIDE MOTORIZED WINDOW SHADES: REFER TO ELECTRICAL DRAWINGS
2. PROVIDE MANUALLY OPERATED WINDOW SHADES
3. REFER TO A-809 FOR FRAME ELEVATION

0"
1"

1ST LEVEL - SCHEDULES - AREA B
A-101B1
FOR BLUEBEAM LABELING/OCR:

File Path: C:_Revit\Local\20380_FISD CLINE ES_ARCH_R21_JKim.rvt

CHECKED BY: DL
DRAWN BY: Author
Plot Stamp: 1/12/2022 1:43:05 PM

PBK

ARCHITECT PBK Architects, Inc.
HOUSTON PBK.com
11 Greenway Plaza, 22nd Floor
Houston, TX 77046
713-965-0608 P
713-961-4571 F
TX Firm: BR 1608

CIVIL
DIG ENGINEERS
T 713 940 3238
STRUCTURAL
KUBALA ENGINEERS
T 800 248 3874
MEP/T
LEAF ENGINEERS
T 713 940 3300
FOOD SERVICE
FOODSERVICE DESIGN PROFESSIONALS
T 281 350 2323
BUILDING ENVELOPE
BEAM
T 713 940 3201

CLINE ELEMENTARY SCHOOL CAMPUS REPLACEMENT

1550 WEST BOULEVARD, FRIENDSWOOD, TX 77546

ISSUE FOR CSP

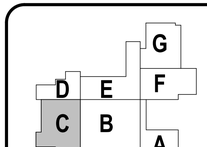

KEY PLAN

NORTH: PLAN TRUE

REGISTERED ARCHITECT MELISSA TURNBAUGH 21779 STATE OF TEXAS

Melissa Turnbaugh

Dec 17 2021

CLIENT
FRIENDSWOOD ISD

DATE	PROJECT NUMBER
DECEMBER 17, 2021	20380

DRAWING HISTORY

No.	Description	Date
1	ADDENDUM #1	01/12/2022

ISSUE FOR CSP

BUILDING NUMBER

1ST LEVEL - SCHEDULES - AREA C

A-101C1

ROOM FINISH SCHEDULE

ROOM DATA №	NAME	FLOOR FINISH	BASE FINISH	WALL FINISHES NORTH	EAST	SOUTH	WEST	CEILINGS FINISH	REMARKS
C100	CORRIDOR	TRZ-1	RB-1	PT-1	PT-1	PT-1	PT-1	CL-1	
C101	INNOVATION LAB	LVT-2	RB-1	PT-1	PT-1	PT-1	PT-1	CL-1	WS-1 ON EAST WALL FROM FLOOR TO 7'A.F.F.
C101A	STORAGE	SC-1	RB-1	PT-1	PT-1	PT-1	PT-1	CL-1	
C102	INNOVATION LAB	LVT-2	RB-1	PT-1	PT-1	PT-1	5	CL-1	
C102A	STORAGE	SC-1	RB-1	PT-1	PT-1	PT-1	PT-1	CL-1	
C103	ELEC	SC-1	RB-1	PT-1	PT-1	PT-1	PT-1	-	
C104	SRP	CPT-1	RB-1	VWC-1	WWC-1	VWC-1	VWC-1	CL-1	WS-1 ON SOUTH WALL FROM FLOOR TO 7'A.F.F.
C105	SPEECH THERAPY	CPT-1	RB-1	VWC-1	WWC-1	VWC-1	VWC-1	CL-1	WS-1 ON SOUTH WALL FROM FLOOR TO 7'A.F.F.
C106	DBC	CPT-1	RB-1	VWC-1	WWC-1	VWC-1	VWC-1	CL-1	WS-1 ON NORTH WALL FROM FLOOR TO 7'A.F.F.
C107	PASS	CPT-1	RB-1	VWC-1	WWC-1	VWC-1	VWC-1	CL-1	WS-1 ON NORTH WALL FROM FLOOR TO 7'A.F.F.
C108	CORRIDOR	CPT-1	RB-1	PT-1	PT-1	PT-1	PT-1	CL-1	
C109	KINDERGARTEN	CPT-1	RB-1	VWC-1	WWC-2	VWC-1	WS-1	CL-1	LVT UNDER DRINKING FOUNTAIN TYP.; WS-1 ON WEST WALL FROM FLOOR TO 7'A.F.F.
C109A	RR	EPF-1	EB-1	WT-1	WT-1	WT-1	WT-1	CL-3	REFERENCE RESTROOM ELEVATIONS FOR TILE LOCATIONS TYP.
C110	TEACHER RR	EPF-1	EB-1	WT-1	WT-1	WT-1	WT-1	CL-3	REFERENCE RESTROOM ELEVATIONS FOR TILE LOCATIONS TYP.
C111	KINDERGARTEN	CPT-1	RB-1	VWC-1	WWC-2	VWC-1	WS-1	CL-1	LVT UNDER DRINKING FOUNTAIN TYP.; WS-1 ON WEST WALL FROM FLOOR TO 7'A.F.F.
C111A	RR	EPF-1	EB-1	WT-1	WT-1	WT-1	WT-1	CL-3	REFERENCE RESTROOM ELEVATIONS FOR TILE LOCATIONS TYP.
C112	ELEC	SC-1	RB-1	PT-1	PT-1	PT-1	PT-1	-	
C114	RR	EPF-1	EB-1	WT-1	WT-1	WT-1	WT-1	CL-3	REFERENCE RESTROOM ELEVATIONS FOR TILE LOCATIONS TYP.
C115	STAIR C	SC-1	RB-1	PT-1	PT-1	PT-1	PT-1	CL-1	WALK OFF CARPET AT EXTERIOR DOOR, RE: FINISH PLANS
C116	CUSTODIAL	SC-1	RB-1	FRP	FRP	FRP	FRP	-	
C117	STOR	SC-1	RB-1	PT-1	PT-1	PT-1	PT-1	CL-1	
C118	ELEVATOR	LVT-2	RB-1	-	-	-	-	-	REFERENCE MANUFACTURER'S SPECIFICATIONS FOR ALL ELEVATOR FINISHES
C119	CORRIDOR	CPT-1	RB-1	PT-1	PT-1	PT-1	PT-1	CL-1	
C120	COLLABORATION	CPT-1	RB-1	PT-1	PT-1	PT-1	PT-1	MC-1	WS-1 ON EAST WALL FROM FLOOR TO 7'A.F.F.
C120A	PORCH	-	RB-1	-	-	-	-	MC-1	
C121	TEACHER RR	EPF-1	EB-1	WT-1	WT-1	WT-1	WT-1	CL-3	REFERENCE RESTROOM ELEVATIONS FOR TILE LOCATIONS TYP.
C122	FIRST GRADE	CPT-1	RB-1	VWC-2	WWC-1	VWC-1	WS-1	CL-1	WS-1 ON WEST WALL FROM FLOOR TO 7'A.F.F.
C123	FIRST GRADE	CPT-1	RB-1	VWC-2	WS-1	VWC-1	WWC-1	CL-1	WS-1 ON EAST WALL FROM FLOOR TO 7'A.F.F.
C124	FIRST GRADE	CPT-1	RB-1	VWC-1	WWC-1	WS-1	WWC-2	CL-1	WS-1 ON SOUTH WALL FROM FLOOR TO 7'A.F.F.
C125	FIRST GRADE	CPT-1	RB-1	VWC-1	WWC-1	WS-1	WWC-2	CL-1	WS-1 ON SOUTH WALL FROM FLOOR TO 7'A.F.F.
C126	FIRST GRADE	CPT-1	RB-1	WS-1	WWC-1	VWC-1	WWC-2	CL-1	WS-1 ON NORTH WALL FROM FLOOR TO 7'A.F.F.

MATERIAL FINISH SCHEDULE

FLOORS:

LUXURY VINYL TILE	LVT-1	PATCRAFT; LINOCUT; MIRROR; 9"X36" (CLINIC, ISOLATION ROOM, OFFICES, MOTHERS ROOM, ART, LIFE SKILLS, ECSC & COACH OFFICE)
	LVT-2	(INNOVATION LAB, LIBRARY WORKROOM, MAKERSPACE)
	LVT-3	ALTERNATE #3, IN LIEU OF TRZ-1, MOHAWK MATUTO STONE FROST BITE STONE
	LVT-4	ATLERNATE #3, IN LIEU OF TRZ-2, MOHAWK MATUTO STONE SONIC SILVER STONE
	LVT-5	ALTERNATE #3, IN LIEU OF TRZ-3, MOHAWK MATUTO STONE BLUE NIGHT STONE
ATHLETIC FLOORING	AF-1	TARKETT SPORTS; OMNI SPORTS 8.1MM ACTIVE PLACE; CLASSIC OAK (GYM FIELD)
	AF-2	TARKETT SPORTS; OMNI SPORTS 8.1MM ACTIVE PLUS; BLUE MAPLE (GYM BORDER)
CARPET	CPT-1	SHAW CONTRACT; SHIFTING FIELD ENCLAVE TILE; STONE; 18"X36" (CLASSROOM, COLLAB FIELD & ADMIN)
	CPT-2	SHAW CONTRACT; SHIFTING FIELD ENCLAVE TILE: RESERVOIR: 18"X36" (COLLAB & CORRIDOR ACCENT)
	CPT-3	SHAW CONTRACT; CUT AND COMPOSE COPY TILE; SECTOR; 24"X24" (LIBRARY)
	CPT-4	SHAW CONTRACT; ALL ACCESS SWIFT; STEP 14549; 24"X24" (WALK OFF MAT)
SEALED CONCRETE	SC-1	STORAGE
EPOXY	EPF-1	STONHARD; STONSHIELD; ASH (RESTROOMS AND KITCHEN)
TERRAZZO	TRZ-1	TERRAZZO MARBLE & SUPPLY; SAND BED, TM21GG-790; INTEGRAL TERRAZZO BASE(FIELD)
	TRZ-2	TERRAZZO MARBLE & SUPPLY; SAND BED, TM20GG-1237; INTEGRAL TERRAZZO BASE (GRAY ACCENT)
	TRZ-3	TERRAZZO MARBLE & SUPPLY; EPOXY, TM20GG-1239; INTEGRAL TERRAZZO BASE (BLUE ACCENT)
WOOD	WD-1	NYDREEE; PLAINSAWN WHITE OAK; ANTIQUE BARREL; 5 1/4" (LEARNING STAIRS)

BASE:

RUBBER BASE	RB-1	ROPPE; BLACK BROWN, 4" (FIELD)
EPOXY BASE	EB-1	STONHARD; STONSHIELD; ASH; INTEGRAL EPOXY BASE (RESTROOMS AND KITCHEN)
TERRAZZO BASE	TRZ-1	MATCH TERRAZZO FLOOR COLOR, U.N.O.
SCHLUTER EDGE TRIM	SCH-1	PER SPECS

CEILINGS:

CL-1	ACT-1 ROCKFON; EDUCATION PLUS SQUARE; WHITE 42100 (FIELD)
CL-2	ACT-2 ROCKFON; KOBALT (KITCHEN)
CL-3	PAINTED GYPSUM; MOISTURE-RESISTANT GYP BD AT ANY WET LOCATIONS
ROOF DECK	MC-1 EPIC METALS; COLONY MAPLE

CASEWORK:

PLASTIC LAMINATE	PL-1	WILSONART; 7996-36; NATURAL RECON (DOORS, CASEWORK & PSI WALL PANELS)
	PL-2	WILSONART; 4877-38; GREY MESH (COUNTERTOP)
	PL-3	FORMICA; 914-58; MARINE BLUE (WALL PANELS)
SOLID SURFACE	SS-1	CORIAN; CAMEO WHITE (TOP CAP OF LOW WALLS)
QUARTZ	QTZ-1	WILSONART; Q4011; ARASHI (COUNTERTOPS & WINDOW SILLS)

RAILINGS:

INFILL PANEL	R-1	BANKER; M13Z-145; FACTORY POWDER COATED FINISH (INTERIOR AND EXTERIOR GUARDRAIL & STAIR RISER AS NOTED), FINISH COLOR TBD

SPECIALTY PRODUCTS:

TOILET PARTITIONS	TP-1	SCRANTON; CHARCOAL GREY; ORANGE PEEL (TOILET PARTITIONS)
LOCKERS	L-1	LIST INDUSTRIES; 717 GRAND SLAM (KITCHEN LOCKERS)
WALL PADS	SP-1	COLOR TBD
WALL GRAPHIC	SP-5	TBD
MOTORIZED SHADES	MS-1	SHADE FABRIC COLOR TBD

WALLS:

PAINT	PT-1	SHERWIN WILLIAMS; SW7028; INCREDIBLE WHITE (FIELD)
	PT-2	SHERWIN WILLIAMS; SW7064; PASSIVE (ACCENT)
	PT-3	SHERWIN WILLIAMS; SW7650; ELLIE GRAY (ACCENT)
	PT-4	SHERWIN WILLIAMS; SW6991; BLACK MAGIC (DOOR FRAMES, WINDOW FRAMES & EXPOSED CEILING)
	PT-5	SHERWIN WILLIAMS; SW6493; EBBTIDE; LIGHT BLUE(ACCENT)
	PT-6	SHERWIN WILLIAMS; SW6804; DIGNITY BLUE; BLUE (SPIRIT COLOR)
VINYL WALL COVERING	VWC-1	KOROSEAL; DESERT SAND; LIGHT FOG (CLASSROOM FIELD)
	VWC-2	KOROSEAL; DESERT SAND; WASHED DENIM (CLASSROOM & CORRIDOR ACCENT)
	VWC-3	HUFFCOR; VINYL DESIGNER COLLECTION GEM PATTERNL; EGGSHELL 44-701 (BETWEEN CAFETERIA & GYM)
WRITABLE SURFACE	WS-1	KOROSEAL; MAG RITE NATURAL WHITE 59"; NATURAL WHITE (CLASSROOM & COLLABORATION)
TACKWALL	TW-1	TACKWALL; DIGNITY BLUE (CORRIDORS)
	TW-2	TACKWALL; 64227 2001 (COLLAB AREAS)
CORNER GUARD	CG-1	PER SPECS

FABRIC:

ACOUSTICAL WALL PANEL	AWP-1	AUTEX; CUBE; MURALLA; BLUE (GYM & CAFETERIA)
	AWP-2	AUTEX; CUBE; FALLING WATER; LIGHT BLUE (GYM & CAFETERIA)
	AWP-3	AUTEX; CUBE; SAVOYE; LIGHT GRAY (CAFETERIA)
STAGE CURTAINS	STG-1	KM FABRICS; MEMORABLE; 1053 (STAGE CURTAIN)
TACKBOARDS	TW-1	CARNEGIE; XOREL; 6427 751 (TACBOARD FOR CORRIDORS)
	TW-2	CARNEGIE; XOREL; 6427 2001 (TACKBOARD FOR COLLABORATION AREAS)
BAFFLES	AB-1	AUTEX; FRONTIER BAFFLES RAFT BLADE; EMPIRE (GYM CEILING)

TILE:

PORCELAIN TILE	WT-1	TRINITY TILE; ALTA; WHITE; 12"X24" (RESTROOM FIELD)
	WT-2	TRINITY TILE; ALTA; BLUE POLISHED; 12"X24" (RESTROOM ACCENT, CAFETERIA)
	WT-3	TRINITY TILE; ALTA; BLUE MATTE; 12"X24" (RESTROOM ACCENT)
	WT-4	TRINITY TILE; ALTA; BLUE POLISHED; 6"X24" (RESTROOM ACCENT)
	WT-5	TRINITY TILE; ALTA; BLUE MATTE; 6"X24" (RESTROOM ACCENT)
	WT-6	ESMER; BB CONCRETE; MIST; 12"X24" (SERVING LINE BACK WALL)
MOSAIC WALL TILE	MWT-1	MARAZZI; COASTAL EFFECTS; SAPPHIRE; LARGE PICKET MOSAIC 1"X4"; 11 1/4"X11 1/4" SHEET; INSTALL VERTICAL (BREAKROOM & COMMUNITY ROOM BACKSPLASH)
	MWT-2	ESMER; H2O; NAVY; 12"X12" MOSAIC SHEET; INSTALL VERTICAL (SERVING LINE COUNTER)
GROUT	G-1	COLOR TBD
	G-2	COLOR TBD
	G-3	COLOR TBD

**ALL GROUT LINES MUST BE SEALED TO BE NON-ABSORBENT.

EXTERIOR MATERIALS:

BRICK	B-1	NORMAN SIZE BRICK - CRIMSON IRONSPOT SMOOTH
	B-2	NORMAN SIZE BRICK - EBONY IRONSPOT SMOOTH
METAL PANEL	MP-1	BERRIDGE HR-16 PANEL SYSTEM - AGED BRONZE
	MP-2	BERRIDGE HS-12 - AGED BRONZE
LOUVER SCREEN	R-1	RUSKIN EV211 - COLOR TBD
MANUFACTURED STONE	MST-1	ARRISCRAFT 8" x 24" AND 12" x 24"; OAKRIDGE SMOOTH
FIBERGLASS REINFORCED PLASTIC PANEL(FRP)	FRP-1	COLOR TBD (CUSTODIAL WALLS)

GENERAL NOTE

1. ALL FINISH MATERIALS SHALL MEET THE FLAME SPREAD RATINGS PER THE BUILDING CODE.
2. REFER TO INTERIOR ELEVATIONS FOR SPECIFIC MATERIAL LOCATIONS.
3. PAINT ALL EXPOSED STRUCT. MEMBERS, STRUCT. DECK, DUCTWORK, DIFFUSERS, PIPING, CONDUIT, EQUIP. HOUSINGS, LIGHT FIXTURE HOUSINGS, CABLE SUPPORTS, CABLE TRAYS, EQUIP. SUPPORTS, HANGERS, ETC. TO MATCH ADJACENT SURFACES.
4. PAINT ALL NON-FACTORY FINISHED EXPOSED METAL.
5. REFER TO TYPICAL FLOORING TRANSITION DETAILS FOR FLOORING MATERIAL TRANSITIONS.
6. ALL FLOORING TRANSITIONS AT DOORS SHALL BE LOCATED UNDER THE DOOR IN THE CLOSED POSITION, U.N.O.
7. PROTECT ALL FINISHED FLOORING SURFACES FROM DAMAGE DURING ALL CONSTRUCTION PHASES.
8. PROVIDE AND INSTALL BULLNOSE TRIM AT ALL TRANSITIONS FROM CERAMIC WALL TILE TO OTHER MATERIAL U.N.O.
9. REFER TO REFLECTED CEILING PLANS FOR CEILING HEIGHTS.
10. ALL ELECTRICAL DEVICE COVERS ARE TO BE WHITE U.N.O.
11. ALL CARPET PATTERNS TO RUN PARALLEL TO CORRIDOR, U.N.O.
12. PAINT ALL HOLLOW METAL DOOR FRAMES TO MATCH ADJACENT WALL COLOR U.N.O.
13. ALL EXPOSED SPRINKLER PIPING TO BE PAINTED. COLOR TBD

DOOR SCHEDULE - FIRST FLOOR AREA 'C'

MARK	DOOR PANEL SIZE W x H W	H	DOOR ELEVATION	DOOR MATERIAL	DOOR FRAME SIZE W x H W	H	FRAME ELEVATION	FRAME MATERIAL	DETAILS SILL	JAMB	HEAD	H.W.	FIRE RATING LABEL	REMARKS
C101	3'-0 3/4"	6'-9 3/4"	A	WD	9'-4"	7'-0"	SF-7	AL	15/A-731	12/A-732	15/A-732	701		
C101A	3'-0"	6'-10"	A	WD	3'-4"	7'-0"	1	AL	18/A-733	04/A-732	09/A-732	203S		
C101B	46'-0"	10'-0"	-	-	46'-0"	10'-0"	-	-	09/A-733	14/A-733	19/A-733	001		FOLDING PARTITION
C102	3'-0 3/4"	6'-9 3/4"	A	WD	9'-4"	7'-0"	SF-7	AL	15/A-731	12/A-732	15/A-732	701		
C102A	3'-0"	6'-10"	A	WD	3'-4"	7'-0"	1	AL	18/A-733	04/A-732	09/A-732	203S		
C103	3'-0"	6'-10"	A	WD	3'-4"	7'-0"	1	AL	18/A-733	04/A-732	09/A-732	201		
C104	3'-0"	6'-10"	A	WD	3'-4"	7'-0"	1	AL	18/A-733	04/A-732	09/A-732	103		
C105	3'-0"	6'-10"	A	WD	3'-4"	7'-0"	1	AL	18/A-733	04/A-732	09/A-732	103		
C106	3'-0"	6'-10"	A	WD	3'-4"	7'-0"	1	AL	18/A-733	04/A-732	09/A-732	103		
C107	3'-0"	6'-10"	A	WD	3'-4"	7'-0"	1	AL	18/A-733	04/A-732	09/A-732	103S		
C108	6'-0"	6'-10"	D	WD	6'-4"	7'-0"	1	AL	18/A-733	04/A-732	15/A-732	700M		
C109	9'-6"	7'-0"	G	AL	9'-7"	7'-0 1/2"	SF-7	AL	18/A-733	12/A-732	17/A-732	001		OPERABLE GLASS PARTITION: RE:SPECS
C109A	3'-0"	6'-10"	A	WD	3'-4"	7'-0"	1	AL	18/A-733	04/A-732	09/A-732	403		
C110	3'-0"	6'-10"	A	WD	3'-4"	7'-0"	1	AL	18/A-733	04/A-732	09/A-732	241		
C111	9'-6"	7'-0"	G	AL	9'-7"	7'-0 1/2"	SF-7 OPP.	AL	18/A-733	12/A-732	17/A-732	001		OPERABLE GLASS PARTITION: RE:SPECS
C111A	3'-0"	6'-10"	A	WD	3'-4"	7'-0"	1	AL	18/A-733	04/A-732	09/A-732	403S		
C112	3'-0"	6'-10"	A	WD	3'-4"	7'-0"	1	AL	18/A-733	04/A-732	09/A-732	201		
C113	3'-0"	6'-10"	A	WD	3'-4"	7'-0"	1	AL	18/A-733	12/A-732	17/A-732	C201C	2HR	5
C114	3'-0"	6'-10"	A	WD	3'-4"	7'-0"	1	AL	18/A-733	04/A-732	09/A-732	241		
C115	6'-0"	6'-10"	D	AL	7'-4 1/2"	30'-0"	CW-3	AL	10/A-731	9/A-731	17/A-722	CW714AM		5
C115A	6'-0"	6'-10"	D	WD	6'-4"	7'-0"	1	AL	18/A-733	04/A-732	09/A-732	738R	1HR	
C116	3'-0"	6'-10"	A	WD	3'-4"	7'-0"	1	AL	18/A-733	04/A-732	09/A-732	203		
C117	3'-0"	6'-10"	A	WD	3'-4"	7'-0"	1	AL	18/A-733	04/A-732	09/A-732	203		
C118	3'-0"	6'-10"	A	WD	3'-4"	7'-0"	1	AL	18/A-733	04/A-732	09/A-732	201C	1HR	
C119	6'-0"	6'-10"	D	WD	6'-4"	7'-0"	1	AL	18/A-733	04/A-732	15/A-732	700M		
C120A	6'-2"	6'-10"	D	AL	81'-6"	11'-10"	SF-19	AL	10/A-731	06/A-731	15/A-732	CW714AM		5
C120B	6'-2"	6'-10"	D	AL	81'-6"	11'-10"	SF-19	AL	10/A-731	06/A-731	15/A-732	CW714AM		5
C121	3'-0"	6'-10"	A	WD	3'-4"	7'-0"	1	AL	18/A-733	04/A-732	09/A-732	241		
C122	9'-6"	7'-0"	G	AL	9'-7"	7'-0 1/2"	SF-7 OPP.	AL	18/A-733	12/A-732	17/A-732	001		OPERABLE GLASS PARTITION: RE:SPECS
C123	9'-6"	7'-0"	G	AL	9'-7"	7'-0 1/2"	SF-7	AL	18/A-733	12/A-732	17/A-732	001		OPERABLE GLASS PARTITION: RE:SPECS
C124	3'-0"	6'-10"	A	WD	9'-4"	7'-0"	SF-7	AL	15/A-731	12/A-732	15/A-732	203		
C124A	9'-6"	7'-0"	G	AL	9'-7"	7'-0 1/2"	SF-7	AL	18/A-733	12/A-732	17/A-732	001		OPERABLE GLASS PARTITION: RE:SPECS
C125	3'-0"	6'-10"	A	WD	9'-4"	7'-0"	SF-7	AL	15/A-731	12/A-732	15/A-732	203		
C125A	9'-6"	7'-0"	G	AL	9'-7"	7'-0 1/2"	SF-7 OPP.	AL	18/A-733	12/A-732	17/A-732	001		OPERABLE GLASS PARTITION: RE:SPECS
C126	3'-0"	6'-10"	A	WD	9'-6"	7'-0"	SF-7 OPP.	AL	15/A-731	12/A-732	15/A-732	203		
C126A	9'-6"	7'-0"	G	AL	9'-7"	7'-0 1/2"	SF-7	AL	18/A-733	12/A-732	17/A-732	001		OPERABLE GLASS PARTITION: RE:SPECS

DOOR SCHEDULE REMARKS

1. PANIC EXIT HARDWARE
2. NOT AN ENTRY DOOR, EXIT ONLY DOOR WITH LOCKING OPERABLE HARDWARE ON SWING-OUT SIDE OF DOOR
3. NO LOCKING HARDWARE
4. ELEC. DOOR OPENER
5. ELEC. CONTROLLED ACCESS HARDWARE WITH CARD READER
6. ELEC. CONTROLLED ACCESS HARDWARE WITH PUSH-BUTTON
7. ELEC. CONTROLLED ACCESS HARDWARE, ROUGH-IN ONLY
8. KEYED REMOVABLE CENTER MULLION
9. CENTER ASTRAGAL
10. 180 DEGREE SWING
11. CONT. HINGE
12. WEATHER-STRIP SEAL
13. FIRE SMOKE SEAL
14. SOUND SEAL
15. PEEP HOLE
16. DOOR BUZZER
17. DOOR CHIME ON OPEN
18. MANUAL HOLD-OPEN
19. MAGNETIC HOLD-OPEN, CONNECT TO FIRE ALARM
20. MAGNETIC HOLD-OPEN, CONNECT TO SECURITY SYSTEM
21. NSULATED DOOR
22. SOUND RATED DOOR ASSEMBLY, STC AS SPECIFIED
23. WINDSTORM DOOR HARDWARE SHALL BE TESTED AS PART OF A COMPLETE DOOR OPENING ASSEMLBY. THE TESTED DOOR OPENING ASSEMBLY SHALL INCLUDE DOOR HARDWARE. THE ENTIRE DOOR OPENING, INCLUDING DOOR HARDWARE, SHALL BE BY DOOR MANUF.
24. ACOUSTICAL GLASS TO MEET FIRE DOOR ASSEMBLY REQUIREMENTS FOR FIRE RATING INDICATED
25. MANUAL PUSH-UP OPERATION
26. ELEC MOTOR OPERATION WITH KEY SWITCH CONTROL, KEY SWITCH ON ONE SIDE OF DOOR ONLY
27. ELEC MOTOR OPERATION WITH KEY SWITCH CONTROL, KEY SWITCH ON BOTH SIDES OF DOOR
28. ELEC MOTOR OPERATION WITH PUSH-BUTTON CONTROL ON ONE SIDE OF DOOR ONLY
29. PANIC EXIT PUSH-BUTTON ON ONE SIDE OF DOOR ONLY
30. AUTOMATIC OPEN ON FIRE ALARM ACTIVATION
31. AUTOMATIC CLOSE ON FIRE ALARM ACTIVATION
32. FAIL SAFE IN OPEN POSITION
33. FAIL SAFE IN CLOSED POSITION
34. MAXIMUM OCCUPANCY SIGNAGE NEAR DOOR
35. SIGNAGE ON DOOR TO READ "NOT AN EXIT"

GLAZING SCHEDULE - AREA C - FIRST FLOOR

MARK	FRAME WIDTH	HEIGHT	ELEVATION	FRAME MATERIAL	DETAILS SILL	JAMB	HEAD	REMARKS
C101	10'-2 1/2"	7'-0"	SF-7	ALUM	14/A-732	12/A-732 SIM	17/A-732	
C101B	3'-10 1/2"	7'-0"	SF-8	ALUM	14/A-732	-	17/A-732	
C101C	22'-0"	7'-0"	SF-9	ALUM	14/A-732	-	17/A-732	
C102	10'-2 1/2"	7'-0"	SF-7	ALUM	14/A-732	12/A-732 SIM	17/A-732	
C102B	3'-8 1/4"	7'-0"	SF-8	ALUM	14/A-732	-	17/A-732	
C109	12'-0"	6'-8"	SF-15 SIM	ALUM	01/A-731	06/A-731	11/A-731	2
C115A	6'-4 1/2"	29'-6"	CW-3	ALUM	10/A-731	06/A-731	17/A-722	
C115B	12'-3 1/2"	26'-4 1/2"	CW-5	ALUM	04/A-731	06/A-731	14/A-731	
C120	81'-6"	11'-10"	SF-19	ALUM	05/A-731	06/A-731	13/A-731	
C122	12'-0"	6'-8"	SF-15 SIM	ALUM	01/A-731	06/A-731	11/A-731	2
C123	12'-0"	6'-8"	SF-15 SIM	ALUM	01/A-731	06/A-731	11/A-731	2
C124	9'-6"	7'-0"	SF-3	ALUM	14/A-732	12/A-732	17/A-732	
C125	9'-6"	7'-0"	SF-3	ALUM	14/A-732	12/A-732	17/A-732	
C126	9'-6"	7'-0"	SF-7	ALUM	14/A-732	12/A-732	17/A-732	

GLAZING SCHEDULE REMARKS

1. PROVIDE MOTORIZED WINDOW SHADES: REFER TO ELECTRICAL DRAWINGS
2. PROVIDE MANUALLY OPERATED WINDOW SHADES
3. REFER TO A-809 FOR FRAME ELEVATION

0" 1"

1ST LEVEL - SCHEDULES - AREA C
A-101C1

FOR BLUEBEAM LABELING/OCR:

File Path: C:_Revit\Local\20380_FISD CLINE ES_ARCH_R21_JiKim.rvt

CHECKED BY: DL
DRAWN BY: Author
Plot Stamp: 1/12/2022 1:43:35 PM

PBK

ARCHITECT PBK Architects, Inc.
HOUSTON PBK.com
11 Greenway Plaza, 22nd Floor
Houston, TX 77046
713-965-0608 P
713-961-4571 F
TX Firm: BR 1608

CIVIL
DIG ENGINEERS
T 713 940 3238
STRUCTURAL
KUBALA ENGINEERS
T 832 248 3874
MEP/T
LEAF ENGINEERS
T 713 940 3300
FOOD SERVICE
FOODSERVICE DESIGN PROFESSIONALS
T 281 350 2323
BUILDING ENVELOPE
BEAN
T 713 940 3201

CLINE ELEMENTARY SCHOOL CAMPUS REPLACEMENT

1550 WEST BOULEVARD, FRIENDSWOOD, TX 77546

ISSUE FOR CSP

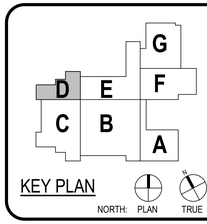

KEY PLAN

NORTH: PLAN TRUE

REGISTERED ARCHITECT MELISSA TURNBAUGH #17779 STATE OF TEXAS

Melissa Turnbaugh

Dec 17, 2021

CLIENT
FRIENDSWOOD ISD

DATE	PROJECT NUMBER
DECEMBER 17, 2021	20380

DRAWING HISTORY

No.	Description	Date
1	ADDENDUM #1	01/12/2022

ISSUE FOR CSP

BUILDING NUMBER

1ST LEVEL - SCHEDULES - AREA D

A-101D1

ROOM FINISH SCHEDULE

ROOM DATA №	NAME	FLOOR FINISH	BASE FINISH	WALL FINISHES NORTH	EAST	SOUTH	WEST	CEILINGS FINISH	REMARKS
D100	CORRIDOR	CPT-1	RB-1	PT-1	PT-1	PT-1	PT-1	CL-1	
D101	FIRST GRADE	CPT-1	RB-1	VWC-1	WS-1	VWC-2	VWC-1	CL-1	WS-1 ON EAST WALL FROM FLOOR TO 7'A.F.F.
D102	FIRST GRADE	CPT-1	RB-1	VWC-1	VWC-1	VWC-2	WS-1	CL-1	WS-1 ON WEST WALL FROM FLOOR TO 7'A.F.F.
D103	STORAGE	SC-1	RB-1	PT-1	PT-1	PT-1	PT-1	CL-1	
D104	RR	EPF-1	EB-1	WT-1	WT-1	WT-1	WT-1	CL-3	REFERENCE RESTROOM ELEVATIONS FOR TILE LOCATIONS TYP.
D105	RR	EPF-1	EB-1	WT-1	WT-1	WT-1	WT-1	CL-3	REFERENCE RESTROOM ELEVATIONS FOR TILE LOCATIONS TYP.
D106	STAIR E	SC-1	RB-1	PT-1	PT-1	PT-1	PT-1	CL-1	
D107	ECSC	LVT-1	RB-1	VWC-1	WS-1	VWC-1	VWC-1	CL-1	WS-1 ON EAST WALL FROM FLOOR TO 7'A.F.F.
D108	ECSC	LVT-1	RB-1	VWC-1	VWC-1	VWC-1	WS-1	CL-1	WS-1 ON WEST WALL FROM FLOOR TO 7'A.F.F.
D109	RR	EPF-1	EB-1	WT-1	WT-1	WT-1	WT-1	CL-3	REFERENCE RESTROOM ELEVATIONS FOR TILE LOCATIONS TYP.
D110	LIFE SKILLS	LVT-1	RB-1	VWC-1	VWC-2	VWC-1	WS-1	CL-1	WS-1 ON WEST WALL FROM FLOOR TO 7'A.F.F.
D110A	RR	EPF-1	EB-1	WT-1	WT-1	WT-1	WT-1	CL-3	
D110B	STORAGE	SC-1	RB-1	PT-1	PT-1	PT-1	PT-1	CL-1	
D111	RESOURCE	CPT-1	RB-1	VWC-1	VWC-1	VWC-1	VWC-1	CL-1	
D112	CORRIDOR	CPT-1	RB-1	PT-1	PT-1	PT-1	PT-1	CL-1	
D113	TEACHER RR	EPF-1	EB-1	WT-1	WT-1	WT-1	WT-1	CL-3	REFERENCE RESTROOM ELEVATIONS FOR TILE LOCATIONS TYP.
D114	STORAGE	SC-1	RB-1	PT-1	PT-1	PT-1	PT-1	CL-1	

MATERIAL FINISH SCHEDULE

FLOORS:

LUXURY VINYL TILE	LVT-1	PATCRAFT; LINOCUT; MIRROR; 9"X36" (CLINIC, ISOLATION ROOM, OFFICES, MOTHERS ROOM, ART, LIFE SKILLS, ECSC & COACH OFFICE)
	LVT-2	(INNOVATION LAB, LIBRARY WORKROOM, MAKERSPACE)
	LVT-3	ALTERNATE #3, IN LIEU OF TRZ-1, MOHAWK MATUTO STONE FROST BITE STONE
	LVT-4	ATLERNATE #3, IN LIEU OF TRZ-2, MOHAWK MATUTO STONE SONIC SILVER STONE
	LVT-5	ALTERNATE #3, IN LIEU OF TRZ-3, MOHAWK MATUTO STONE BLUE NIGHT STONE
ATHLETIC FLOORING	AF-1	TARKETT SPORTS; OMNI SPORTS 8.1MM ACTIVE PLACE; CLASSIC OAK (GYM FIELD)
	AF-2	TARKETT SPORTS; OMNI SPORTS 8.1MM ACTIVE PLUS; BLUE MAPLE (GYM BORDER)
CARPET	CPT-1	SHAW CONTRACT; SHIFTING FIELD ENCLAVE TILE; STONE; 18"X36" (CLASSROOM, COLLAB FIELD & ADMIN)
	CPT-2	SHAW CONTRACT; SHIFTING FIELD ENCLAVE TILE: RESERVOIR: 18"X36" (COLLAB & CORRIDOR ACCENT)
	CPT-3	SHAW CONTRACT; CUT AND COMPOSE COPY TILE; SECTOR; 24"X24" (LIBRARY)
	CPT-4	SHAW CONTRACT; ALL ACCESS SWIFT; STEP 14549; 24"X24" (WALK OFF MAT)
SEALED CONCRETE	SC-1	STORAGE
EPOXY	EPF-1	STONHARD; STONSHIELD; ASH (RESTROOMS AND KITCHEN)
TERRAZZO	TRZ-1	TERRAZZO MARBLE & SUPPLY; SAND BED, TM21GG-790; INTEGRAL TERRAZZO BASE(FIELD)
	TRZ-2	TERRAZZO MARBLE & SUPPLY; SAND BED, TM20GG-1237; INTEGRAL TERRAZZO BASE (GRAY ACCENT)
	TRZ-3	TERRAZZO MARBLE & SUPPLY; EPOXY, TM20GG-1239; INTEGRAL TERRAZZO BASE (BLUE ACCENT)
WOOD	WD-1	NYDREEE; PLAINSAWN WHITE OAK; ANTIQUE BARREL; 5 1/4" (LEARNING STAIRS)

BASE:

RUBBER BASE	RB-1	ROPPE; BLACK BROWN; 4" (FIELD)
EPOXY BASE	EB-1	STONHARD; STONSHIELD; ASH; INTEGRAL EPOXY BASE (RESTROOMS AND KITCHEN)
TERRAZZO BASE	TRZ-1	MATCH TERRAZZO FLOOR COLOR, U.N.O.
SCHLUTER EDGE TRIM	SCH-1	PER SPECS

CEILINGS:

CL-1	ACT-1 ROCKFON; EDUCATION PLUS SQUARE; WHITE 42100 (FIELD)	
CL-2	ACT-2 ROCKFON; KORAL (KITCHEN)	
CL-3	PAINTED GYPSUM; MOISTURE-RESISTANT GYP BD AT ANY WET LOCATIONS	
ROOF DECK	MC-1	EPIC METALS; COLONY MAPLE

CASEWORK:

PLASTIC LAMINATE	PL-1	WILSONART; 7996-36; NATURAL RECON (DOORS, CASEWORK & PSI WALL PANELS)
	PL-2	WILSONART; 4877-38; GREY MESH (COUNTERTOP)
	PL-3	FORMICA; 914-58; MARINE BLUE (WALL PANELS)
SOLID SURFACE	SS-1	CORIAN; CAMEO WHITE (TOP CAP OF LOW WALLS)
QUARTZ	QTZ-1	WILSONART; Q4011; ARASHI (COUNTERTOPS & WINDOW SILLS)

RAILINGS:

INFILL PANEL	R-1	BANKER; M13Z-145; FACTORY POWDER COATED FINISH (INTERIOR AND EXTERIOR GUARDRAIL & STAIR RISER AS NOTED), FINISH COLOR TBD

SPECIALTY PRODUCTS:

TOILET PARTITIONS	TP-1	SCRANTON; CHARCOAL GREY; ORANGE PEEL (TOILET PARTITIONS)
LOCKERS	L-1	LIST INDUSTRIES; 717 GRAND SLAM (KITCHEN LOCKERS)
WALL PADS	SP-1	COLOR TBD
WALL GRAPHIC	SP-5	TBD
MOTORIZED SHADES	MS-1	SHADE FABRIC COLOR TBD

WALLS:

PAINT	PT-1	SHERWIN WILLIAMS; SW7028; INCREDIBLE WHITE (FIELD)
	PT-2	SHERWIN WILLIAMS; SW7064; PASSIVE (ACCENT)
	PT-3	SHERWIN WILLIAMS; SW7650; ELLIE GRAY (ACCENT)
	PT-4	SHERWIN WILLIAMS; SW6991; BLACK MAGIC (DOOR FRAMES, WINDOW FRAMES & EXPOSED CEILING)
	PT-5	SHERWIN WILLIAMS; SW6493; EBBTIDE; LIGHT BLUE(ACCENT)
	PT-6	SHERWIN WILLIAMS; SW6804; DIGNITY BLUE; BLUE (SPIRIT COLOR)
VINYL WALL COVERING	VWC-1	KOROSEAL; DESERT SAND; LIGHT FOG (CLASSROOM FIELD)
	VWC-2	KOROSEAL; DESERT SAND; WASHED DENIM (CLASSROOM & CORRIDOR ACCENT)
	VWC-3	HUFFCOR; VINYL DESIGNER COLLECTION GEM PATTERNL; EGGSHELL 44-701 (BETWEEN CAFETERIA & GYM)
WRITABLE SURFACE	WS-1	KOROSEAL; MAG RITE NATURAL WHITE 59"; NATURAL WHITE (CLASSROOM & COLLABORATION)
TACKWALL	TW-1	TACKWALL; DIGNITY BLUE (CORRIDORS)
	TW-2	TACKWALL; 64227 2001 (COLLAB AREAS)
CORNER GUARD	CG-1	PER SPECS

FABRIC:

ACOUSTICAL WALL PANEL	AWP-1	AUTEX; CUBE; MURALLA; BLUE (GYM & CAFETERIA)
	AWP-2	AUTEX; CUBE; FALLING WATER; LIGHT BLUE (GYM & CAFETERIA)
	AWP-3	AUTEX; CUBE; SAVOYE; LIGHT GRAY (CAFETERIA)
STAGE CURTAINS	STG-1	KM FABRICS; MEMORABLE; 1053 (STAGE CURTAIN)
TACKBOARDS	TW-1	CARNEGIE; XOREL; 6427 751 (TACBOARD FOR CORRIDORS)
	TW-2	CARNEGIE; XOREL; 6427 2001 (TACKBOARD FOR COLLABORATION AREAS)
BAFFLES	AB-1	AUTEX; FRONTIER BAFFLES RAFT BLADE; EMPIRE (GYM CEILING)

TILE:

PORCELAIN TILE	WT-1	TRINITY TILE; ALTA; WHITE; 12"X24" (RESTROOM FIELD)
	WT-2	TRINITY TILE; ALTA; BLUE POLISHED; 12"X24" (RESTROOM ACCENT, CAFETERIA)
	WT-3	TRINITY TILE; ALTA; BLUE MATTE; 12"X24" (RESTROOM ACCENT)
	WT-4	TRINITY TILE; ALTA; BLUE POLISHED; 6"X24" (RESTROOM ACCENT)
	WT-5	TRINITY TILE; ALTA; BLUE MATTE; 6"X24" (RESTROOM ACCENT)
	WT-6	ESMER; BB CONCRETE; MIST; 12"X24" (SERVING LINE BACK WALL)
MOSAIC WALL TILE	MWT-1	MARAZZI; COASTAL EFFECTS; SAPPHIRE; LARGE PICKET MOSAIC 1"X4"; 11 1/4"X11 1/4" SHEET; INSTALL VERTICAL (BREAKROOM & COMMUNITY ROOM BACKSPLASH)
	MWT-2	ESMER; H2O; NAVY; 12"X12" MOSAIC SHEET; INSTALL VERTICAL (SERVING LINE COUNTER)
GROUT	G-1	COLOR TBD
	G-2	COLOR TBD
	G-3	COLOR TBD

**ALL GROUT LINES MUST BE SEALED TO BE NON-ABSORBENT.

EXTERIOR MATERIALS:

BRICK	B-1	NORMAN SIZE BRICK - CRIMSON IRONSPOT SMOOTH
	B-2	NORMAN SIZE BRICK - EBONY IRONSPOT SMOOTH
METAL PANEL	MP-1	BERRIDGE HR-16 PANEL SYSTEM - AGED BRONZE
	MP-2	BERRIDGE HS-12 - AGED BRONZE
LOUVER SCREEN	R-1	RUSKIN EV211 - COLOR TBD
MANUFACTURED STONE	MST-1	ARRISCRAFT 8" x 24" AND 12" x 24"; OAKRIDGE SMOOTH
FIBERGLASS REINFORCED PLASTIC PANEL(FRP)	FRP-1	COLOR TBD (CUSTODIAL WALLS)

GENERAL NOTE

1. ALL FINISH MATERIALS SHALL MEET THE FLAME SPREAD RATINGS PER THE BUILDING CODE.
2. REFER TO INTERIOR ELEVATIONS FOR SPECIFIC MATERIAL LOCATIONS.
3. PAINT ALL EXPOSED STRUCT. MEMBERS, STRUCT. DECK, DUCTWORK, DIFFUSERS, PIPING, CONDUIT, EQUIP. HOUSINGS, LIGHT FIXTURE HOUSINGS, CABLE SUPPORTS, CABLE TRAYS, EQUIP. SUPPORTS, HANGERS, ETC. TO MATCH ADJACENT SURFACES.
4. PAINT ALL NON-FACTORY FINISHED EXPOSED METAL.
5. REFER TO TYPICAL FLOORING TRANSITION DETAILS FOR FLOORING MATERIAL TRANSITIONS.
6. ALL FLOORING TRANSITIONS AT DOORS SHALL BE LOCATED UNDER THE DOOR IN THE CLOSED POSITION, U.N.O.
7. PROTECT ALL FINISHED FLOORING SURFACES FROM DAMAGE DURING ALL CONSTRUCTION PHASES.
8. PROVIDE AND INSTALL BULLNOSE TRIM AT ALL TRANSITIONS FROM CERAMIC WALL TILE TO OTHER MATERIAL U.N.O.
9. REFER TO REFLECTED CEILING PLANS FOR CEILING HEIGHTS.
10. ALL ELECTRICAL DEVICE COVERS ARE TO BE WHITE U.N.O.
11. ALL CARPET PATTERNS TO RUN PARALLEL TO CORRIDOR, U.N.O.
12. PAINT ALL HOLLOW METAL DOOR FRAMES TO MATCH ADJACENT WALL COLOR U.N.O.
13. ALL EXPOSED SPRINKLER PIPING TO BE PAINTED. COLOR TBD

DOOR SCHEDULE - FIRST FLOOR AREA 'D'

MARK	DOOR PANEL SIZE W x H W	H	DOOR ELEVATION	DOOR MATERIAL	DOOR FRAME SIZE W x H W	H	FRAME ELEVATION	FRAME MATERIAL	DETAILS SILL	JAMB	HEAD	H.W.	FIRE RATING LABEL	REMARKS
D100	6'-0"	6'-10"	D	WD	6'-4"	7'-0"	1	AL	18/A-733	04/A-732	15/A-732	700M		
D101	9'-6"	7'-0"	G	AL	9'-7"	7'-0 1/2"	SF-7	AL	18/A-733	12/A-732	15/A-732	001		OPERABLE GLASS PARTITION: RE:SPECS
D102	9'-6"	7'-0"	G	AL	9'-7"	7'-0 1/2"	SF-7 OPP.	AL	18/A-733	12/A-732	15/A-732	001		OPERABLE GLASS PARTITION: RE:SPECS
D103	3'-0"	6'-10"	A	WD	3'-4"	7'-0"	1	AL	18/A-733	04/A-732	09/A-732	203		
D106	6'-0"	6'-10"	D	AL	7'-4 1/2"	30'-0"	CW-4	AL	10/A-731	9/A-731	17/A-722	CW714AM		5
D106A	6'-0"	6'-10"	D	WD	6'-4"	7'-0"	1	AL	18/A-733	04/A-732	09/A-732	738R	1HR	
D107	3'-0"	6'-10"	A	WD	9'-4"	7'-0"	SF-7	AL	18/A-733	12/A-732	15/A-732	203		
D108	3'-0"	6'-10"	A	WD	9'-4"	7'-0"	SF-7	AL	18/A-733	12/A-732	15/A-732	203		
D109A	3'-0"	6'-10"	A	WD	3'-4"	7'-0"	1	AL	18/A-733	04/A-732	09/A-732	341		
D109B	3'-0"	6'-10"	A	WD	3'-4"	7'-0"	1	AL	18/A-733	04/A-732	09/A-732	341		
D110	3'-0"	6'-10"	A	WD	9'-4"	7'-0"	SF-7	AL	18/A-733	12/A-732	15/A-732	203		
D110A	3'-0"	6'-10"	A	WD	3'-4"	7'-0"	1	AL	18/A-733	04/A-732	09/A-732	303		
D110B	3'-0"	6'-10"	A	WD	3'-4"	7'-0"	1	AL	18/A-733	04/A-732	09/A-732	203		
D112	6'-0"	6'-10"	D	WD	6'-4"	7'-0"	1	AL	18/A-733	04/A-732	15/A-732	700M		
D113	3'-0"	6'-10"	A	WD	3'-4"	7'-0"	1	AL	18/A-733	04/A-732	09/A-732	241		
D114	3'-0"	6'-10"	A	WD	3'-4"	7'-0"	1	AL	18/A-733	04/A-732	09/A-732	203		
E102B	6'-2"	6'-10"	D	AL	114'-0"	11'-10"	SF-20	AL	10/A-731	06/A-731	15/A-732	CW714AM		5

DOOR SCHEDULE REMARKS

1. PANIC EXIT HARDWARE
2. NOT AN ENTRY DOOR, EXIT ONLY DOOR WITH LOCKING OPERABLE HARDWARE ON SWING-OUT SIDE OF DOOR
3. NO LOCKING HARDWARE
4. ELEC. DOOR OPENER
5. ELEC. CONTROLLED ACCESS HARDWARE WITH CARD READER
6. ELEC. CONTROLLED ACCESS HARDWARE WITH PUSH-BUTTON
7. ELEC. CONTROLLED ACCESS HARDWARE, ROUGH-IN ONLY
8. KEYED REMOVABLE CENTER MULLION
9. CENTER ASTRAGAL
10. 180 DEGREE SWING
11. CONT. HINGE
12. WEATHER-STRIP SEAL
13. FIRE SMOKE SEAL
14. SOUND SEAL
15. PEEP HOLE
16. DOOR BUZZER
17. DOOR CHIME ON OPEN
18. MANUAL HOLD-OPEN
19. MAGNETIC HOLD-OPEN, CONNECT TO FIRE ALARM
20. MAGNETIC HOLD-OPEN, CONNECT TO SECURITY SYSTEM
21. NSULATED DOOR
22. SOUND RATED DOOR ASSEMBLY, STC AS SPECIFIED
23. WINDSTORM DOOR HARDWARE SHALL BE TESTED AS PART OF A COMPLETE DOOR OPENING ASSEMLBY. THE TESTED DOOR OPENING ASSEMBLY SHALL INCLUDE DOOR HARDWARE. THE ENTIRE DOOR OPENING, INCLUDING DOOR HARDWARE, SHALL BE BY DOOR MANUF.
24. ACOUSTICAL GLASS TO MEET FIRE DOOR ASSEMBLY REQUIREMENTS FOR FIRE RATING INDICATED
25. MANUAL PUSH-UP OPERATION
26. ELEC MOTOR OPERATION WITH KEY SWITCH CONTROL, KEY SWITCH ON ONE SIDE OF DOOR ONLY
27. ELEC MOTOR OPERATION WITH KEY SWITCH CONTROL, KEY SWITCH ON BOTH SIDES OF DOOR
28. ELEC MOTOR OPERATION WITH PUSH-BUTTON CONTROL ON ONE SIDE OF DOOR ONLY
29. PANIC EXIT PUSH-BUTTON ON ONE SIDE OF DOOR ONLY
30. AUTOMATIC OPEN ON FIRE ALARM ACTIVATION
31. AUTOMATIC CLOSE ON FIRE ALARM ACTIVATION
32. FAIL SAFE IN OPEN POSITION
33. FAIL SAFE IN CLOSED POSITION
34. MAXIMUM OCCUPANCY SIGNAGE NEAR DOOR
35. SIGNAGE ON DOOR TO READ "NOT AN EXIT"

GLAZING SCHEDULE - AREA D - FIRST FLOOR

MARK	FRAME WIDTH	HEIGHT	ELEVATION	FRAME MATERIAL	DETAILS SILL	JAMB	HEAD	REMARKS
D101B	12'-0"	6'-8"	SF-15 SIM	ALUM	01/A-731	06/A-731	11/A-731	2
D102B	12'-0"	6'-8"	SF-15 SIM	ALUM	01/A-731	06/A-731	11/A-731	2
D106	12'-3 1/2"	26'-1 3/4"	CW-6	ALUM	04/A-731	09/A-731	14/A-731	
D106A	6'-4 1/2"	29'-6"	CW-4	ALUM	05/A-731	08/A-731	17/A-722	3
D107	9'-6"	7'-0"	SF-7	ALUM	14/A-732	12/A-732	17/A-732	
D108	9'-6"	7'-0"	SF-7	ALUM	14/A-732	12/A-732	17/A-732	
D110	9'-6"	7'-0"	SF-7	ALUM	14/A-732	12/A-732	17/A-732	
D110B	12'-0"	6'-8"	SF-15 SIM	ALUM	01/A-731	06/A-731	11/A-731	2

GLAZING SCHEDULE REMARKS

1. PROVIDE MOTORIZED WINDOW SHADES: REFER TO ELECTRICAL DRAWINGS
2. PROVIDE MANUALLY OPERATED WINDOW SHADES
3. REFER TO A-809 FOR FRAME ELEVATION

0" 1"

1ST LEVEL - SCHEDULES - AREA D A-101D1

FOR BLUEBEAM LABELING/OCR:

File Path: C:_Revit\Local\20380_FISD CLINE ES_ARCH_R21_JiKim.rvt

CHECKED BY: DL
DRAWN BY: Author
Plot Stamp: 1/12/2022 1:44:09 PM

PBK

ARCHITECT PBK Architects, Inc.
PBK.com
HOUSTON
11 Greenway Plaza, 22nd Floor
Houston, TX 77046
713-965-0608 P
713-961-4571 F
TX Firm: BR 1608

CIVIL
DIG ENGINEERS
T 713 940 3238
STRUCTURAL
KUBALA ENGINEERS
T 832 248 3874
MEP/T
LEAF ENGINEERS
T 713 940 3300
FOOD SERVICE
FOODSERVICE DESIGN PROFESSIONALS
T 281 350 2323
BUILDING ENVELOPE
BEAM
T 713 940 3201

CLINE ELEMENTARY SCHOOL CAMPUS REPLACEMENT

1550 WEST BOULEVARD, FRIENDSWOOD, TX 77546

ISSUE FOR CSP

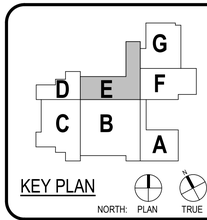

KEY PLAN

NORTH: PLAN TRUE

REGISTERED ARCHITECT MELISSA TURNBAUGH 41779 STATE OF TEXAS

Melissa Turnbaugh

Dec 17, 2021

CLIENT	
FRIENDSWOOD ISD	
DATE DECEMBER 17, 2021	PROJECT NUMBER 20380

DRAWING HISTORY

No.	Description	Date
1	ADDENDUM #1	01/12/2022

ISSUE FOR CSP

BUILDING NUMBER

1ST LEVEL - SCHEDULES - AREA E

A-101E1

ROOM FINISH SCHEDULE

ROOM DATA №	ROOM DATA NAME	FLOOR FINISH	BASE FINISH	WALL FINISHES NORTH	EAST	SOUTH	WEST	CEILINGS FINISH	REMARKS
E100	CORRIDOR	TRZ-1	RB-1	PT-1	PT-1	PT-1	PT-1	CL-1	
E101	CORRIDOR	CPT-1	RB-1	PT-1	PT-1	PT-1	PT-1	CL-1	
E102	COLLABORATION	CPT-1	RB-1	PT-1	PT-1	PT-1	PT-1	MC-1	WS-1 ON SOUTH WALL FROM FLOOR TO 7'A.F.F.
E102A	PORCH	-	RB-1	-	-	-	-	MC-1	
E103	SECOND GRADE	CPT-1	RB-1	WS-1	VWC-1	VWC-1	VWC-2	CL-1	WS-1 ON NORTH WALL FROM FLOOR TO 7'A.F.F.
E104	SECOND GRADE	CPT-1	RB-1	WS-1	VWC-1	VWC-1	VWC-2	CL-1	WS-1 ON NORTH WALL FROM FLOOR TO 7'A.F.F.
E105	SECOND GRADE	CPT-1	RB-1	VWC-1	VWC-1	WS-1	VWC-2	CL-1	WS-1 ON SOUTH WALL FROM FLOOR TO 7'A.F.F.
E106	SECOND GRADE	CPT-1	RB-1	VWC-2	WS-1	VWC-1	VWC-1	CL-1	WS-1 ON EAST WALL FROM FLOOR TO 7'A.F.F.
E107	SECOND GRADE	CPT-1	RB-1	VWC-2	VWC-1	VWC-1	WS-1	CL-1	WS-1 ON WEST WALL FROM FLOOR TO 7'A.F.F.
E108	SECOND GRADE	CPT-1	RB-1	VWC-2	WS-1	VWC-1	VWC-1	CL-1	WS-1 ON EAST WALL FROM FLOOR TO 7'A.F.F.
E109	SECOND GRADE	CPT-1	RB-1	VWC-2	VWC-1	VWC-1	WS-1	CL-1	WS-1 ON WEST WALL FROM FLOOR TO 7'A.F.F.
E110	ART	LVT-1	RB-1	WS-1	VWC-1	VWC-1	VWC-1	CL-1	WS-1 ON NORTH WALL FROM FLOOR TO 7'A.F.F.
E110A	STORAGE	SC-1	RB-1	PT-1	PT-1	PT-1	PT-1	CL-1	
E110B	KILN	SC-1	RB-1	PT-1	PT-1	PT-1	PT-1	CL-1	
E111	MUSIC	CPT-1	RB-1	VWC-1	VWC-1	WS-1	VWC-1	CL-1	REFERENCE ELEVATIONS FOR ACOUSTIC WALL PANEL LOCATIONS
E111A	STORAGE	SC-1	RB-1	PT-1	PT-1	PT-1	PT-1	CL-1	

MATERIAL FINISH SCHEDULE

FLOORS:

LUXURY VINYL TILE	LVT-1	PATCRAFT; LINOCUT; MIRROR; 9"X36" (CLINIC, ISOLATION ROOM, OFFICES, MOTHERS ROOM, ART, LIFE SKILLS, ECSC & COACH OFFICE)
	LVT-2	(INNOVATION LAB, LIBRARY WORKROOM, MAKERSPACE)
	LVT-3	ALTERNATE #3, IN LIEU OF TRZ-1, MOHAWK MATUTO STONE FROST BITE STONE
	LVT-4	ATLERNATE #3, IN LIEU OF TRZ-2, MOHAWK MATUTO STONE SONIC SILVER STONE
	LVT-5	ALTERNATE #3, IN LIEU OF TRZ-3, MOHAWK MATUTO STONE BLUE NIGHT STONE
ATHLETIC FLOORING	AF-1	TARKETT SPORTS; OMNI SPORTS 8.1MM ACTIVE PLACE; CLASSIC OAK (GYM FIELD)
	AF-2	TARKETT SPORTS; OMNI SPORTS 8.1MM ACTIVE PLUS; BLUE MAPLE (GYM BORDER)
CARPET	CPT-1	SHAW CONTRACT; SHIFTING FIELD ENCLAVE TILE; STONE; 18"X36" (CLASSROOM, COLLAB FIELD & ADMIN)
	CPT-2	SHAW CONTRACT; SHIFTING FIELD ENCLAVE TILE: RESERVOIR: 18"X36" (COLLAB & CORRIDOR ACCENT)
	CPT-3	SHAW CONTRACT; CUT AND COMPOSE COPY TILE; SECTOR; 24"X24" (LIBRARY)
	CPT-4	SHAW CONTRACT; ALL ACCESS SWIFT; STEP 14549; 24"X24" (WALK OFF MAT)
SEALED CONCRETE	SC-1	STORAGE
EPOXY	EPF-1	STONHARD; STONSHIELD; ASH (RESTROOMS AND KITCHEN)
TERRAZZO	TRZ-1	TERRAZZO MARBLE & SUPPLY; SAND BED, TM21GG-790; INTEGRAL TERRAZZO BASE(FIELD)
	TRZ-2	TERRAZZO MARBLE & SUPPLY; SAND BED, TM20GG-1237; INTEGRAL TERRAZZO BASE (GRAY ACCENT)
	TRZ-3	TERRAZZO MARBLE & SUPPLY; EPOXY, TM20GG-1239; INTEGRAL TERRAZZO BASE (BLUE ACCENT)
WOOD	WD-1	NYDREEE; PLAINSAWN WHITE OAK; ANTIQUE BARREL; 5 1/4" (LEARNING STAIRS)

BASE:

RUBBER BASE	RB-1	ROPPE; BLACK BROWN; 4" (FIELD)
EPOXY BASE	EB-1	STONHARD; STONSHIELD; ASH; INTEGRAL EPOXY BASE (RESTROOMS AND KITCHEN)
TERRAZZO BASE	TRZ-1	MATCH TERRAZZO FLOOR COLOR, U.N.O.
SCHLUTER EDGE TRIM	SCH-1	PER SPECS

CEILINGS:

CL-1	ACT-1 ROCKFON; EDUCATION PLUS SQUARE; WHITE 42100 (FIELD)	
CL-2	ACT-2 ROCKFON; KOBAL (KITCHEN)	
CL-3	PAINTED GYPSUM; MOISTURE-RESISTANT GYP BD AT ANY WET LOCATIONS	
ROOF DECK	MC-1	EPIC METALS; COLONY MAPLE

CASEWORK:

PLASTIC LAMINATE	PL-1	WILSONART; 7996-36; NATURAL RECON (DOORS, CASEWORK & PSI WALL PANELS)
	PL-2	WILSONART; 4877-38; GREY MESH (COUNTERTOP)
	PL-3	FORMICA; 914-58; MARINE BLUE (WALL PANELS)
SOLID SURFACE	SS-1	CORIAN; CAMEO WHITE (TOP CAP OF LOW WALLS)
QUARTZ	QTZ-1	WILSONART; Q4011; ARASHI (COUNTERTOPS & WINDOW SILLS)

RAILINGS:

INFILL PANEL	R-1	BANKER; M13Z-145; FACTORY POWDER COATED FINISH (INTERIOR AND EXTERIOR GUARDRAIL & STAIR RISER AS NOTED), FINISH COLOR TBD

SPECIALTY PRODUCTS:

TOILET PARTITIONS	TP-1	SCRANTON; CHARCOAL GREY; ORANGE PEEL (TOILET PARTITIONS)
LOCKERS	L-1	LIST INDUSTRIES; 717 GRAND SLAM (KITCHEN LOCKERS)
WALL PADS	SP-1	COLOR TBD
WALL GRAPHIC	SP-5	TBD
MOTORIZED SHADES	MS-1	SHADE FABRIC COLOR TBD

WALLS:

PAINT	PT-1	SHERWIN WILLIAMS; SW7028; INCREDIBLE WHITE (FIELD)
	PT-2	SHERWIN WILLIAMS; SW7064; PASSIVE (ACCENT)
	PT-3	SHERWIN WILLIAMS; SW7650; ELLIE GRAY (ACCENT)
	PT-4	SHERWIN WILLIAMS; SW6991; BLACK MAGIC (DOOR FRAMES, WINDOW FRAMES & EXPOSED CEILING)
	PT-5	SHERWIN WILLIAMS; SW6493; EBBTIDE; LIGHT BLUE(ACCENT)
	PT-6	SHERWIN WILLIAMS; SW6804; DIGNITY BLUE; BLUE (SPIRIT COLOR)
VINYL WALL COVERING	VWC-1	KOROSEAL; DESERT SAND; LIGHT FOG (CLASSROOM FIELD)
	VWC-2	KOROSEAL; DESERT SAND; WASHED DENIM (CLASSROOM & CORRIDOR ACCENT)
	VWC-3	HUFFCOR; VINYL DESIGNER COLLECTION GEM PATTERNL; EGGSHELL 44-701 (BETWEEN CAFETERIA & GYM)
WRITABLE SURFACE	WS-1	KOROSEAL; MAG RITE NATURAL WHITE 59"; NATURAL WHITE (CLASSROOM & COLLABORATION)
TACKWALL	TW-1	TACKWALL; DIGNITY BLUE (CORRIDORS)
	TW-2	TACKWALL; 64227 2001 (COLLAB AREAS)
CORNER GUARD	CG-1	PER SPECS

FABRIC:

ACOUSTICAL WALL PANEL	AWP-1	AUTEX; CUBE; MURALLA; BLUE (GYM & CAFETERIA)
	AWP-2	AUTEX; CUBE; FALLING WATER; LIGHT BLUE (GYM & CAFETERIA)
	AWP-3	AUTEX; CUBE; SAVOYE; LIGHT GRAY (CAFETERIA)
STAGE CURTAINS	STG-1	KM FABRICS; MEMORABLE; 1053 (STAGE CURTAIN)
TACKBOARDS	TW-1	CARNEGIE; XOREL; 6427 751 (TACBOARD FOR CORRIDORS)
	TW-2	CARNEGIE; XOREL; 6427 2001 (TACKBOARD FOR COLLABORATION AREAS)
BAFFLES	AB-1	AUTEX; FRONTIER BAFFLES RAFT BLADE; EMPIRE (GYM CEILING)

TILE:

PORCELAIN TILE	WT-1	TRINITY TILE; ALTA; WHITE; 12"X24" (RESTROOM FIELD)
	WT-2	TRINITY TILE; ALTA; BLUE POLISHED; 12"X24" (RESTROOM ACCENT, CAFETERIA)
	WT-3	TRINITY TILE; ALTA; BLUE MATTE; 12"X24" (RESTROOM ACCENT)
	WT-4	TRINITY TILE; ALTA; BLUE POLISHED; 6"X24" (RESTROOM ACCENT)
	WT-5	TRINITY TILE; ALTA; BLUE MATTE; 6"X24" (RESTROOM ACCENT)
	WT-6	ESMER; BB CONCRETE; MIST; 12"X24" (SERVING LINE BACK WALL)
MOSAIC WALL TILE	MWT-1	MARAZZI; COASTAL EFFECTS; SAPPHIRE; LARGE PICKET MOSAIC 1"X4"; 11 1/4"X11 1/4" SHEET; INSTALL VERTICAL (BREAKROOM & COMMUNITY ROOM BACKSPLASH)
	MWT-2	ESMER; H2O; NAVY; 12"X12" MOSAIC SHEET; INSTALL VERTICAL (SERVING LINE COUNTER)
GROUT	G-1	COLOR TBD
	G-2	COLOR TBD
	G-3	COLOR TBD

**ALL GROUT LINES MUST BE SEALED TO BE NON-ABSORBENT.

EXTERIOR MATERIALS:

BRICK	B-1	NORMAN SIZE BRICK; CRIMSON IRONSPOT SMOOTH
	B-2	NORMAN SIZE BRICK - EBONY IRONSPOT SMOOTH
METAL PANEL	MP-1	BERRIDGE HR-16 PANEL SYSTEM - AGED BRONZE
	MP-2	BERRIDGE HS-12 - AGED BRONZE
LOUVER SCREEN	R-1	RUSKIN EV211 - COLOR TBD
MANUFACTURED STONE	MST-1	ARRISCRAFT 8" x 24" AND 12" x 24"; OAKRIDGE SMOOTH
FIBERGLASS REINFORCED PLASTIC PANEL(FRP)	FRP-1	COLOR TBD (CUSTODIAL WALLS)

GENERAL NOTE

1. ALL FINISH MATERIALS SHALL MEET THE FLAME SPREAD RATINGS PER THE BUILDING CODE.
2. REFER TO INTERIOR ELEVATIONS FOR SPECIFIC MATERIAL LOCATIONS.
3. PAINT ALL EXPOSED STRUCT. MEMBERS, STRUCT. DECK, DUCTWORK, DIFFUSERS, PIPING, CONDUIT, EQUIP. HOUSINGS, LIGHT FIXTURE HOUSINGS, CABLE SUPPORTS, CABLE TRAYS, EQUIP. SUPPORTS, HANGERS, ETC. TO MATCH ADJACENT SURFACES.
4. PAINT ALL NON-FACTORY FINISHED EXPOSED METAL.
5. REFER TO TYPICAL FLOORING TRANSITION DETAILS FOR FLOORING MATERIAL TRANSITIONS.
6. ALL FLOORING TRANSITIONS AT DOORS SHALL BE LOCATED UNDER THE DOOR IN THE CLOSED POSITION, U.N.O.
7. PROTECT ALL FINISHED FLOORING SURFACES FROM DAMAGE DURING ALL CONSTRUCTION PHASES.
8. PROVIDE AND INSTALL BULLNOSE TRIM AT ALL TRANSITIONS FROM CERAMIC WALL TILE TO OTHER MATERIAL U.N.O.
9. REFER TO REFLECTED CEILING PLANS FOR CEILING HEIGHTS.
10. ALL ELECTRICAL DEVICE COVERS ARE TO BE WHITE U.N.O.
11. ALL CARPET PATTERNS TO RUN PARALLEL TO CORRIDOR, U.N.O.
12. PAINT ALL HOLLOW METAL DOOR FRAMES TO MATCH ADJACENT WALL COLOR U.N.O.
13. ALL EXPOSED SPRINKLER PIPING TO BE PAINTED. COLOR TBD

DOOR SCHEDULE - FIRST FLOOR AREA 'E'

MARK	DOOR PANEL SIZE W	DOOR PANEL SIZE H	DOOR ELEVATION	DOOR MATERIAL	DOOR FRAME SIZE W	DOOR FRAME SIZE H	FRAME ELEVATION	FRAME MATERIAL	DETAILS SILL	DETAILS JAMB	DETAILS HEAD	H.W.	FIRE RATING LABEL	REMARKS
D111	3'-0"	6'-10"	A	WD	3'-4"	7'-0"	1	AL	18/A-733	04/A-732	09/A-732	103		
E101	6'-0"	6'-10"	D	WD	6'-4"	7'-0"	1	AL	18/A-733	04/A-732	15/A-732	700M		
E102A	6'-2"	6'-10"	D	AL	11'4'-0"	11'-10"	SF-20	AL	10/A-731	06/A-731	15/A-732	CW714AM		5
E103	9'-6"	7'-0"	G	AL	9'-7"	7'-0 1/2"	SF-7	AL	18/A-733	12/A-732	15/A-732	001		OPERABLE GLASS PARTITION: RE:SPECS
E104	9'-6"	7'-0"	G	AL	9'-7"	7'-0 1/2"	SF-7	AL	18/A-733	12/A-732	15/A-732	001		OPERABLE GLASS PARTITION: RE:SPECS
E105	3'-0 1/8"	6'-10"	A	WD	5'-4"	7'-0"	SF-11	AL	18/A-733	12/A-732	15/A-732	203		
E106	3'-0"	6'-10"	A	WD	3'-6"	7'-0"	SF-7 OPP.	AL	15/A-731	12/A-732	15/A-732	203		
E106A	9'-6"	7'-0"	G	AL	9'-7"	7'-0 1/2"	SF-7	AL	18/A-733	12/A-732	17/A-731	001		OPERABLE GLASS PARTITION: RE:SPECS
E107	3'-0"	6'-10"	A	WD	9'-4"	7'-0"	SF-7	AL	15/A-731	12/A-732	15/A-732	203		
E107A	9'-6"	7'-0"	G	AL	9'-7"	7'-0 1/2"	SF-7 OPP.	AL	18/A-733	12/A-732	17/A-731	001		OPERABLE GLASS PARTITION: RE:SPECS
E108	3'-0"	6'-10"	A	WD	9'-6"	7'-0"	SF-7 OPP.	AL	15/A-731	12/A-732	15/A-732	203		
E108A	9'-6"	7'-0"	G	AL	9'-7"	7'-0 1/2"	SF-7	AL	18/A-733	12/A-732	17/A-731	001		OPERABLE GLASS PARTITION: RE:SPECS
E109	3'-0"	6'-10"	A	WD	9'-4"	7'-0"	SF-7	AL	15/A-731	12/A-732	15/A-732	203		
E109A	9'-6"	7'-0"	G	AL	9'-7"	7'-0 1/2"	SF-7 OPP.	AL	18/A-733	12/A-732	17/A-731	001		OPERABLE GLASS PARTITION: RE:SPECS
E110	3'-0"	6'-9 3/4"	A	WD	9'-4"	7'-0"	SF-7	AL	15/A-731	12/A-732	15/A-732	203		
E110A	3'-0"	6'-10"	A	WD	3'-4"	7'-0"	1	AL	18/A-733	04/A-732	09/A-732	203		
E110B	3'-0"	6'-10"	A	WD	3'-4"	7'-0"	1	AL	18/A-733	04/A-732	09/A-732	203		
E110C	3'-0"	6'-10"	A	HM	3'-4"	7'-0"	1	AL	10/A-731	06/A-731 SIM	17/A-731	CW205		5
E111	3'-0"	6'-9 3/4"	A	WD	9'-4"	7'-0"	SF-7	AL	15/A-731	12/A-732	15/A-732	203G		
E111A	3'-0"	6'-10"	A	WD	3'-4"	7'-0"	1	AL	18/A-733	04/A-732	09/A-732	203		

DOOR SCHEDULE REMARKS

1. PANIC EXIT HARDWARE
2. NOT AN ENTRY DOOR, EXIT ONLY DOOR WITH LOCKING OPERABLE HARDWARE ON SWING-OUT SIDE OF DOOR
3. NO LOCKING HARDWARE
4. ELEC. DOOR OPENER
5. ELEC. CONTROLLED ACCESS HARDWARE WITH CARD READER
6. ELEC. CONTROLLED ACCESS HARDWARE WITH PUSH-BUTTON
7. ELEC. CONTROLLED ACCESS HARDWARE, ROUGH-IN ONLY
8. KEYED REMOVABLE CENTER MULLION
9. CENTER ASTRAGAL
10. 180 DEGREE SWING
11. CONT. HINGE
12. WEATHER-STRIP SEAL
13. FIRE SMOKE SEAL
14. SOUND SEAL
15. PEEP HOLE
16. DOOR BUZZER
17. DOOR CHIME ON OPEN
18. MANUAL HOLD-OPEN
19. MAGNETIC HOLD-OPEN, CONNECT TO FIRE ALARM
20. MAGNETIC HOLD-OPEN, CONNECT TO SECURITY SYSTEM
21. NSULATED DOOR
22. SOUND RATED DOOR ASSEMBLY, STC AS SPECIFIED
23. WINDSTORM DOOR HARDWARE SHALL BE TESTED AS PART OF A COMPLETE DOOR OPENING ASSEMLBY. THE TESTED DOOR OPENING ASSEMBLY SHALL INCLUDE DOOR HARDWARE. THE ENTIRE DOOR OPENING, INCLUDING DOOR HARDWARE, SHALL BE BY DOOR MANUF.
24. ACOUSTICAL GLASS TO MEET FIRE DOOR ASSEMBLY REQUIREMENTS FOR FIRE RATING INDICATED
25. MANUAL PUSH-UP OPERATION
26. ELEC MOTOR OPERATION WITH KEY SWITCH CONTROL, KEY SWITCH ON ONE SIDE OF DOOR ONLY
27. ELEC MOTOR OPERATION WITH KEY SWITCH CONTROL, KEY SWITCH ON BOTH SIDES OF DOOR
28. ELEC MOTOR OPERATION WITH PUSH-BUTTON CONTROL ON ONE SIDE OF DOOR ONLY
29. PANIC EXIT PUSH-BUTTON ON ONE SIDE OF DOOR ONLY
30. AUTOMATIC OPEN ON FIRE ALARM ACTIVATION
31. AUTOMATIC CLOSE ON FIRE ALARM ACTIVATION
32. FAIL SAFE IN OPEN POSITION
33. FAIL SAFE IN CLOSED POSITION
34. MAXIMUM OCCUPANCY SIGNAGE NEAR DOOR
35. SIGNAGE ON DOOR TO READ "NOT AN EXIT"

GLAZING SCHEDULE - AREA E - FIRST FLOOR

MARK	FRAME WIDTH	FRAME HEIGHT	ELEVATION	FRAME MATERIAL	DETAILS SILL	DETAILS JAMB	DETAILS HEAD	REMARKS
E102B	11'4'-0"	11'-10"	SF-20	ALUM	01/A-731	06/A-731	13/A-731	
E105	5'-4"	7'-0"	SF-11	ALUM	14/A-732	12/A-732	17/A-732	
E105B	10'-10"	6'-8"	SF-15 SIM	ALUM	01/A-731	07/A-731	13/A-731	2
E106	9'-6"	7'-0"	SF-7	ALUM	14/A-732	12/A-732	17/A-732	
E107	9'-6"	7'-0"	SF-7	ALUM	14/A-732	12/A-732	17/A-732	
E108	9'-6"	7'-0"	SF-7	ALUM	14/A-732	12/A-732	17/A-732	
E109	9'-6"	7'-0"	SF-7	ALUM	14/A-732	12/A-732	17/A-732	
E110	9'-6"	7'-0"	SF-7	ALUM	14/A-732	12/A-732	17/A-732	
E110B	12'-0"	6'-8"	SF-15 SIM	ALUM	01/A-731	07/A-731	13/A-731	2
E111	9'-6"	7'-0"	SF-7	ALUM	14/A-732	12/A-732	17/A-732	
E111B	12'-0"	6'-8"	SF-15 SIM	ALUM	01/A-731	07/A-731	13/A-731	

GLAZING SCHEDULE REMARKS

1. PROVIDE MOTORIZED WINDOW SHADES: REFER TO ELECTRICAL DRAWINGS
2. PROVIDE MANUALLY OPERATED WINDOW SHADES
3. REFER TO A-809 FOR FRAME ELEVATION

0"
1"

1ST LEVEL - SCHEDULES - AREA E
A-101E1

FOR BLUEBEAM LABELING/OCR:

File Path: C:_Revit\Local\20380_FISD CLINE ES_ARCH_R21_JiKim.rvt

CHECKED BY: DL
DRAWN BY: Author
Plot Stamp: 1/12/2022 1:45:04 PM

PBK

ARCHITECT PBK Architects, Inc.
HOUSTON PBK.com
11 Greenway Plaza, 22nd Floor
Houston, TX 77046
713-965-0608 P
713-961-4571 F
TX Firm: BR 1608

CIVIL
DIG ENGINEERS
T 713 940 3238
STRUCTURAL
KUBALA ENGINEERS
T 800 248 3874
MEP/T
LEAF ENGINEERS
T 713 940 3300
FOOD SERVICE
FOODSERVICE DESIGN PROFESSIONALS
T 281 350 2323
BUILDING ENVELOPE
BEAM
T 713 940 3201

CLINE ELEMENTARY SCHOOL CAMPUS REPLACEMENT

1550 WEST BOULEVARD, FRIENDSWOOD, TX 77546

ISSUE FOR CSP

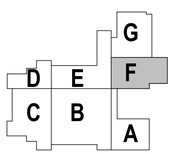

KEY PLAN

NORTH: PLAN TRUE

Dec 17, 2021

CLIENT
FRIENDSWOOD ISD

DATE	PROJECT NUMBER
DECEMBER 17, 2021	20380

DRAWING HISTORY

No.	Description	Date
1	ADDENDUM #1	01/12/2022

ISSUE FOR CSP

BUILDING NUMBER

1ST LEVEL - SCHEDULES - AREA F

A-101F1

ROOM FINISH SCHEDULE

ROOM DATA №	ROOM DATA NAME	FLOOR FINISH	BASE FINISH	WALL FINISHES NORTH	EAST	SOUTH	WEST	CEILINGS FINISH	REMARKS
F100	CORRIDOR	TRZ-1	RB-1					CL-1	
F101	CAFETERIA	TRZ-1	RB-1					CL-1	WT-2 ON EAST WALL AS SHOWN ON INTERIOR ELEVATION
F102	CHAIR STORAGE	SC-1	RB-1	PT-1	PT-1	PT-1	PT-1	CL-2	
F103	IDF	SC-1	RB-1	PT-1	PT-1	PT-1	PT-1	-	
F104	RR	EPF-1	EB-1	W1	W1	W1	W1	CL-3	
F105	KITCHEN	EPF-1	EB-1	PT-1	PT-1	PT-1	PT-1	CL-2	
F105A	COOLER / FREEZER	SC-1	EB-1	PT-1	PT-1	PT-1	PT-1	-	
F105B	SERVING LINE	TRZ-3	RB-1	WT-6	WT-6	WT-6	WT-6	CL-2	REFER TO INTERIOR ELEVATIONS
F106	WAREWASH	EPF-1	EB-1	PT-1	PT-1	PT-1	PT-1	CL-2	
F107	DRY STORAGE	EPF-1	EB-1	PT-1	PT-1	PT-1	PT-1	CL-2	
F108	OFFICE	CPT-1	RB-1	PT-1	PT-1	PT-1	PT-1	CL-2	
F109	LOCKER ROOM	EPF-1	EB-1	PT-1	PT-1	PT-1	PT-1	CL-2	
F110	RR	EPF-1	EB-1	W1	W1	W1	W1	CL-3	
F111	CUSTODIAL	SC-1	RB-1	W4	PT-1	PT-1	W4		

MATERIAL FINISH SCHEDULE

FLOORS:

LUXURY VINYL TILE	LVT-1	PATCRAFT; LINOCUT; MIRROR; 9"X36" (CLINIC, ISOLATION ROOM, OFFICES, MOTHERS ROOM, ART, LIFE SKILLS, ECSC & COACH OFFICE)
	LVT-2	(INNOVATION LAB, LIBRARY WORKROOM, MAKERSPACE)
	LVT-3	ALTERNATE #3, IN LIEU OF TRZ-1, MOHAWK MATUTO STONE FROST BITE STONE
	LVT-4	ATLERNATE #3, IN LIEU OF TRZ-2, MOHAWK MATUTO STONE SONIC SILVER STONE
	LVT-5	ALTERNATE #3, IN LIEU OF TRZ-3, MOHAWK MATUTO STONE BLUE NIGHT STONE
ATHLETIC FLOORING	AF-1	TARKETT SPORTS; OMNI SPORTS 8.1MM ACTIVE PLACE; CLASSIC OAK (GYM FIELD)
	AF-2	TARKETT SPORTS; OMNI SPORTS 8.1MM ACTIVE PLUS; BLUE MAPLE (GYM BORDER)
CARPET	CPT-1	SHAW CONTRACT; SHIFTING FIELD ENCLAVE TILE; STONE; 18"X36" (CLASSROOM, COLLAB FIELD & ADMIN)
	CPT-2	SHAW CONTRACT; SHIFTING FIELD ENCLAVE TILE: RESERVOIR: 18"X36" (COLLAB & CORRIDOR ACCENT)
	CPT-3	SHAW CONTRACT; CUT AND COMPOSE COPY TILE; SECTOR; 24"X24" (LIBRARY)
	CPT-4	SHAW CONTRACT; ALL ACCESS SWIFT; STEP 14549; 24"X24" (WALK OFF MAT)
SEALED CONCRETE	SC-1	STORAGE
EPOXY	EPF-1	STONHARD; STONSHIELD; ASH (RESTROOMS AND KITCHEN)
TERRAZZO	TRZ-1	TERRAZZO MARBLE & SUPPLY; SAND BED, TM21GG-790; INTEGRAL TERRAZZO BASE(FIELD)
	TRZ-2	TERRAZZO MARBLE & SUPPLY; SAND BED, TM20GG-1237; INTEGRAL TERRAZZO BASE (GRAY ACCENT)
	TRZ-3	TERRAZZO MARBLE & SUPPLY; EPOXY, TM20GG-1239; INTEGRAL TERRAZZO BASE (BLUE ACCENT)
WOOD	WD-1	NYDREEE; PLAINSAWN WHITE OAK; ANTIQUE BARREL; 5 1/4" (LEARNING STAIRS)

BASE:

RUBBER BASE	RB-1	ROPPE; BLACK BROWN; 4" (FIELD)
EPOXY BASE	EB-1	STONHARD; STONSHIELD; ASH; INTEGRAL EPOXY BASE (RESTROOMS AND KITCHEN)
TERRAZZO BASE	TRZ-1	MATCH TERRAZZO FLOOR COLOR, U.N.O.
SCHLUTER EDGE TRIM	SCH-1	PER SPECS

CEILINGS:

CL-1	ACT-1 ROCKFON; EDUCATION PLUS SQUARE; WHITE 42100 (FIELD)	
CL-2	ACT-2 ROCKFON; KOBAL (KITCHEN)	
CL-3	PAINTED GYPSUM; MOISTURE-RESISTANT GYP BD AT ANY WET LOCATIONS	
ROOF DECK	MC-1	EPIC METALS; COLONY MAPLE

CASEWORK:

PLASTIC LAMINATE	PL-1	WILSONART; 7996-36; NATURAL RECON (DOORS, CASEWORK & PSI WALL PANELS)
	PL-2	WILSONART; 4877-38; GREY MESH (COUNTERTOP)
	PL-3	FORMICA; 914-58; MARINE BLUE (WALL PANELS)
SOLID SURFACE	SS-1	CORIAN; CAMEO WHITE (TOP CAP OF LOW WALLS)
QUARTZ	QTZ-1	WILSONART; Q4011; ARASHI (COUNTERTOPS & WINDOW SILLS)

RAILINGS:

INFILL PANEL	R-1	BANKER; M13Z-145; FACTORY POWDER COATED FINISH (INTERIOR AND EXTERIOR GUARDRAIL & STAIR RISER AS NOTED), FINISH COLOR TBD

SPECIALTY PRODUCTS:

TOILET PARTITIONS	TP-1	SCRANTON: CHARCOAL GREY; ORANGE PEEL (TOILET PARTITIONS)
LOCKERS	L-1	LIST INDUSTRIES; 717 GRAND SLAM (KITCHEN LOCKERS)
WALL PADS	SP-1	COLOR TBD
WALL GRAPHIC	SP-5	TBD
MOTORIZED SHADES	MS-1	SHADE FABRIC COLOR TBD

WALLS:

PAINT	PT-1	SHERWIN WILLIAMS; SW7028; INCREDIBLE WHITE (FIELD)
	PT-2	SHERWIN WILLIAMS; SW7064; PASSIVE (ACCENT)
	PT-3	SHERWIN WILLIAMS; SW7650; ELLIE GRAY (ACCENT)
	PT-4	SHERWIN WILLIAMS; SW6991; BLACK MAGIC (DOOR FRAMES, WINDOW FRAMES & EXPOSED CEILING)
	PT-5	SHERWIN WILLIAMS; SW6493; EBBTIDE; LIGHT BLUE(ACCENT)
	PT-6	SHERWIN WILLIAMS; SW6804; DIGNITY BLUE; BLUE (SPIRIT COLOR)
VINYL WALL COVERING	VWC-1	KOROSEAL; DESERT SAND; LIGHT FOG (CLASSROOM FIELD)
	VWC-2	KOROSEAL; DESERT SAND; WASHED DENIM (CLASSROOM & CORRIDOR ACCENT)
	VWC-3	HUFFCOR; VINYL DESIGNER COLLECTION GEM PATTERNL; EGGSHELL 44-701 (BETWEEN CAFETERIA & GYM)
WRITABLE SURFACE	WS-1	KOROSEAL; MAG RITE NATURAL WHITE 59"; NATURAL WHITE (CLASSROOM & COLLABORATION)
TACKWALL	TW-1	TACKWALL; DIGNITY BLUE (CORRIDORS)
	TW-2	TACKWALL; 64227 2001 (COLLAB AREAS)
CORNER GUARD	CG-1	PER SPECS

FABRIC:

ACOUSTICAL WALL PANEL	AWP-1	AUTEX; CUBE; MURALLA; BLUE (GYM & CAFETERIA)
	AWP-2	AUTEX; CUBE; FALLING WATER; LIGHT BLUE (GYM & CAFETERIA)
	AWP-3	AUTEX; CUBE; SAVOYE; LIGHT GRAY (CAFETERIA)
STAGE CURTAINS	STG-1	KM FABRICS; MEMORABLE; 1053 (STAGE CURTAIN)
TACKBOARDS	TW-1	CARNEGIE; XOREL; 6427 751 (TACBOARD FOR CORRIDORS)
	TW-2	CARNEGIE; XOREL; 6427 2001 (TACKBOARD FOR COLLABORATION AREAS)
BAFFLES	AB-1	AUTEX; FRONTIER BAFFLES RAFT BLADE; EMPIRE (GYM CEILING)

TILE:

PORCELAIN TILE	WT-1	TRINITY TILE; ALTA; WHITE; 12"X24" (RESTROOM FIELD)
	WT-2	TRINITY TILE; ALTA; BLUE POLISHED; 12"X24" (RESTROOM ACCENT, CAFETERIA)
	WT-3	TRINITY TILE; ALTA; BLUE MATTE; 12"X24" (RESTROOM ACCENT)
	WT-4	TRINITY TILE; ALTA; BLUE POLISHED; 6"X24" (RESTROOM ACCENT)
	WT-5	TRINITY TILE; ALTA; BLUE MATTE; 6"X24" (RESTROOM ACCENT)
	WT-6	ESMER; BB CONCRETE; MIST; 12"X24" (SERVING LINE BACK WALL)
MOSAIC WALL TILE	MWT-1	MARAZZI; COASTAL EFFECTS; SAPPHIRE; LARGE PICKET MOSAIC 1"X4"; 11 1/4"X11 1/4" SHEET; INSTALL VERTICAL (BREAKROOM & COMMUNITY ROOM BACKSPLASH)
	MWT-2	ESMER; H2O; NAVY; 12"X12" MOSAIC SHEET, INSTALL VERTICAL (SERVING LINE COUNTER)
GROUT	G-1	COLOR TBD
	G-2	COLOR TBD
	G-3	COLOR TBD

**ALL GROUT LINES MUST BE SEALED TO BE NON-ABSORBENT.

EXTERIOR MATERIALS:

BRICK	B-1	NORMAN SIZE BRICK; CRIMSON IRONSPOT SMOOTH
	B-2	NORMAN SIZE BRICK - EBONY IRONSPOT SMOOTH
METAL PANEL	MP-1	BERRIDGE HR-16 PANEL SYSTEM - AGED BRONZE
	MP-2	BERRIDGE HS-12 - AGED BRONZE
LOUVER SCREEN	R-1	RUSKIN EV211 - COLOR TBD
MANUFACTURED STONE	MST-1	ARRISCRAFT 8" x 24" AND 12" x 24"; OAKRIDGE SMOOTH
FIBERGLASS REINFORCED PLASTIC PANEL(FRP)	FRP-1	COLOR TBD (CUSTODIAL WALLS)

GENERAL NOTE

1. ALL FINISH MATERIALS SHALL MEET THE FLAME SPREAD RATINGS PER THE BUILDING CODE.
2. REFER TO INTERIOR ELEVATIONS FOR SPECIFIC MATERIAL LOCATIONS.
3. PAINT ALL EXPOSED STRUCT. MEMBERS, STRUCT. DECK, DUCTWORK, DIFFUSERS, PIPING, CONDUIT, EQUIP. HOUSINGS, LIGHT FIXTURE HOUSINGS, CABLE SUPPORTS, CABLE TRAYS, EQUIP. SUPPORTS, HANGERS, ETC. TO MATCH ADJACENT SURFACES.
4. PAINT ALL NON-FACTORY FINISHED EXPOSED METAL.
5. REFER TO TYPICAL FLOORING TRANSITION DETAILS FOR FLOORING MATERIAL TRANSITIONS.
6. ALL FLOORING TRANSITIONS AT DOORS SHALL BE LOCATED UNDER THE DOOR IN THE CLOSED POSITION, U.N.O.
7. PROTECT ALL FINISHED FLOORING SURFACES FROM DAMAGE DURING ALL CONSTRUCTION PHASES.
8. PROVIDE AND INSTALL BULLNOSE TRIM AT ALL TRANSITIONS FROM CERAMIC WALL TILE TO OTHER MATERIAL U.N.O.
9. REFER TO REFLECTED CEILING PLANS FOR CEILING HEIGHTS.
10. ALL ELECTRICAL DEVICE COVERS ARE TO BE WHITE U.N.O.
11. ALL CARPET PATTERNS TO RUN PARALLEL TO CORRIDOR, U.N.O.
12. PAINT ALL HOLLOW METAL DOOR FRAMES TO MATCH ADJACENT WALL COLOR U.N.O.
13. ALL EXPOSED SPRINKLER PIPING TO BE PAINTED. COLOR TBD

DOOR SCHEDULE - FIRST FLOOR AREA 'F'

MARK	DOOR PANEL SIZE W	DOOR PANEL SIZE H	DOOR ELEVATION	DOOR MATERIAL	DOOR FRAME SIZE W	DOOR FRAME SIZE H	FRAME ELEVATION	FRAME MATERIAL	DETAILS SILL	DETAILS JAMB	DETAILS HEAD	H.W.	FIRE RATING LABEL	REMARKS
F100A	6'-0"	6'-10"	D	AL	6'-4"	10'-0"	CW-9	AL	10/A-731	16/A-731 SIM	16/A-731	CW714AM		5
F100C	12'-0"	12'-0"	F	STL	12'-0"	12'-0"	-	STL	04/A-733	20/A-732	19/A-732	002	2HR	
F101	51'-0"	15'-0"	-		51'-0"	15'-0"	-		13/A-733	14/A-732	13/A-751	001		MOTORIZED FOLDING PARTITION
F101A	6'-0"	6'-10"	D	WD	9'-0"	10'-0"	SF-10	HM	15/A-731	01/A-732	06/A-732	700CM		
F101B	6'-0"	6'-10"	D	WD	10'-0"	10'-0"	SF-10	HM	15/A-731	15/A-732	15/A-732	700CM		
F101C	6'-0"	6'-10"	D	AL	56'-0"	12'-0"	CW-7	AL	10/A-731	16/A-731 SIM	16/A-731	W714AM		
F101D	6'-0"	6'-10"	D	AL	56'-0"	12'-0"	CW-7	AL	10/A-731	16/A-731 SIM	16/A-731	CW714AM		5
F101E	6'-0"	7'-0"	D	AL	10'-1 1/2"	10'-0"	CW-8	AL	10/A-731	16/A-731 SIM	16/A-731	CW714AM		5
F102	6'-0"	6'-10"	C	WD	6'-4"	7'-0"	1	HM	18/A-733	02/A-732	07/A-732	212S		
F103	3'-0"	6'-10"	A	WD	3'-4"	7'-0"	1	HM	18/A-733	02/A-732	07/A-732	C201	2HR	5
F104	3'-0"	6'-10"	A	WD	3'-4"	7'-0"	1	HM	18/A-733	02/A-732	07/A-732	801		
F105A	2'-11 1/2"	6'-10"	B	WD	16'-0"	10'-0"	SF-23	HM	15/A-731	05/A-732	15/A-732	203		
F105B	12'-0"	9'-8"	F	STL	12'-0"	9'-8"	-	STL	04/A-733	11/A-732	16/A-732	002		
F105C	3'-0 1/4"	6'-10"	B	WD	16'-0"	10'-0"	SF-23 OPP.	HM	15/A-731	05/A-732	15/A-732	203		
F105D	4'-0"	6'-10"	E	HM	3'-4"	7'-0"	1	HM	10/A-731	01/A-732	06/A-732	CW205		5
F106	3'-0"	4'-0"	H	STL	3'-0"	4'-0"	-	STL	06/A-731			001		
F107	4'-0"	6'-10"	E	WD	3'-4"	7'-0"	1	HM	18/A-733	03/A-732	08/A-732	203		
F108	3'-0"	6'-10"	E	WD	3'-4"	7'-0"	1	HM	18/A-733	03/A-732	08/A-732	103		
F110	3'-0"	6'-10"	A	WD	3'-4"	7'-0"	1	HM	18/A-733	03/A-732	08/A-732	303		
F111	3'-0"	6'-10"	E	WD	3'-4"	7'-0"	1	HM	18/A-733	03/A-732	08/A-732	203		

DOOR SCHEDULE REMARKS

1. PANIC EXIT HARDWARE
2. NOT AN ENTRY DOOR, EXIT ONLY DOOR WITH LOCKING OPERABLE HARDWARE ON SWING-OUT SIDE OF DOOR
3. NO LOCKING HARDWARE
4. ELEC. DOOR OPENER
5. ELEC. CONTROLLED ACCESS HARDWARE WITH CARD READER
6. ELEC. CONTROLLED ACCESS HARDWARE WITH PUSH-BUTTON
7. ELEC. CONTROLLED ACCESS HARDWARE, ROUGH-IN ONLY
8. KEYED REMOVABLE CENTER MULLION
9. CENTER ASTRAGAL
10. 180 DEGREE SWING
11. CONT. HINGE
12. WEATHER-STRIP SEAL
13. FIRE SMOKE SEAL
14. SOUND SEAL
15. PEEP HOLE
16. DOOR BUZZER
17. DOOR CHIME ON OPEN
18. MANUAL HOLD-OPEN
19. MAGNETIC HOLD-OPEN, CONNECT TO FIRE ALARM
20. MAGNETIC HOLD-OPEN, CONNECT TO SECURITY SYSTEM
21. NSULATED DOOR
22. SOUND RATED DOOR ASSEMBLY, STC AS SPECIFIED
23. WINDSTORM DOOR HARDWARE SHALL BE TESTED AS PART OF A COMPLETE DOOR OPENING ASSEMLBY. THE TESTED DOOR OPENING ASSEMBLY SHALL INCLUDE DOOR HARDWARE. THE ENTIRE DOOR OPENING, INCLUDING DOOR HARDWARE, SHALL BE BY DOOR MANUF.
24. ACOUSTICAL GLASS TO MEET FIRE DOOR ASSEMBLY REQUIREMENTS FOR FIRE RATING INDICATED
25. MANUAL PUSH-UP OPERATION
26. ELEC MOTOR OPERATION WITH KEY SWITCH CONTROL, KEY SWITCH ON ONE SIDE OF DOOR ONLY
27. ELEC MOTOR OPERATION WITH KEY SWITCH CONTROL, KEY SWITCH ON BOTH SIDES OF DOOR
28. ELEC MOTOR OPERATION WITH PUSH-BUTTON CONTROL ON ONE SIDE OF DOOR ONLY
29. PANIC EXIT PUSH-BUTTON ON ONE SIDE OF DOOR ONLY
30. AUTOMATIC OPEN ON FIRE ALARM ACTIVATION
31. AUTOMATIC CLOSE ON FIRE ALARM ACTIVATION
32. FAIL SAFE IN OPEN POSITION
33. FAIL SAFE IN CLOSED POSITION
34. MAXIMUM OCCUPANCY SIGNAGE NEAR DOOR
35. SIGNAGE ON DOOR TO READ "NOT AN EXIT"

GLAZING SCHEDULE - AREA F - FIRST FLOOR

MARK	FRAME WIDTH	FRAME HEIGHT	ELEVATION	FRAME MATERIAL	DETAILS SILL	DETAILS JAMB	DETAILS HEAD	REMARKS
F101A	8'-11 1/2"	10'-0"	SF-10	ALUM	14/A-732	05/A-732	10/A-732	
F101B	10'-0"	10'-0"	SF-10	ALUM	14/A-732	05/A-732	10/A-732	
F101C	56'-0"	12'-0"	CW-7	ALUM	05/A-731	09/A-731	19/A-731	
F101E	10'-1 1/2"	10'-0"	CW-8	ALUM	05/A-731	09/A-731	19/A-731	
F101H	10'-0"	3'-4"	SF-15 SIM	ALUM	01/A-731	07/A-731	13/A-731	
F101I	18'-0"	3'-4"	SF-16	ALUM	01/A-731	07/A-731	13/A-731	
F101J	18'-0"	3'-4"	SF-16 SIM	ALUM	01/A-731	07/A-731	13/A-731	
F101K	10'-0"	3'-4"	SF-15 SIM	ALUM	01/A-731	07/A-731	13/A-731	
F105A	16'-0"	10'-0"	SF-23	ALUM	14/A-732	05/A-732 SIM	17/A-732	
F105C	16'-0"	10'-0"	SF-3	ALUM	14/A-732	05/A-732 SIM	17/A-732	
F108	3'-4"	4'-0"	SF-13 SIM	H.M.	10/A-732 SIM	05/A-732 SIM	10/A-732 SIM	

GLAZING SCHEDULE REMARKS

1. PROVIDE MOTORIZED WINDOW SHADES: REFER TO ELECTRICAL DRAWINGS
2. PROVIDE MANUALLY OPERATED WINDOW SHADES
3. REFER TO A-809 FOR FRAME ELEVATION

0"
1"

1ST LEVEL - SCHEDULES - AREA F
A-101F1
FOR BLUEBEAM LABELING/OCR:

C:_Revit\Local\20380_FISD CLINE ES_ARCH_R21_JiKim.rvt
File Path:

CHECKED BY:
DL
DRAWN BY:
Author
Plot Stamp:
1/12/2022 1:46:33 PM

PBK

ARCHITECT PBK Architects, Inc.
HOUSTON PBK.com
11 Greenway Plaza, 22nd Floor
Houston, TX 77046
713-965-0608 P
713-961-4571 F
TX Firm: BR 1608

CIVIL
DIG ENGINEERS
T 713 940 3238
STRUCTURAL
KUBALA ENGINEERS
T 800 248 3874
MEP/T
LEAF ENGINEERS
T 713 940 3300
FOOD SERVICE
FOODSERVICE DESIGN PROFESSIONALS
T 281 350 2323
BUILDING ENVELOPE
BEAM
T 713 940 3201

CLINE ELEMENTARY SCHOOL CAMPUS REPLACEMENT

1550 WEST BOULEVARD, FRIENDSWOOD, TX 77546

ISSUE FOR CSP

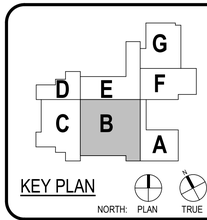

REGISTERED ARCHITECT MELISSA TURNBAUGH 41779 STATE OF TEXAS

Melissa Turnbaugh

Dec 17, 2021

CLIENT
FRIENDSWOOD ISD

DATE	PROJECT NUMBER
DECEMBER 17, 2021	20380

DRAWING HISTORY

No.	Description	Date
1	ADDENDUM #1	01/12/2022

ISSUE FOR CSP

BUILDING NUMBER

2ND LEVEL - SCHEDULES - AREA B

A-102B1

ROOM FINISH SCHEDULE

ROOM DATA №	NAME	FLOOR FINISH	BASE FINISH	WALL FINISHES NORTH	EAST	SOUTH	WEST	CEILINGS FINISH	REMARKS
B200	CORRIDOR	CPT-5	RB-1	PT-1	PT-1	PT-1	PT-1	CL-1	
B201	CORRIDOR	CPT-5	RB-1	PT-1	PT-1	PT-1	PT-1	MC-1	
B202	CORRIDOR	CPT-6	RB-1	PT-1	PT-1	PT-1	PT-1	CL-1	
B203	COLLABORATION	CPT-5	RB-1	W3	PT-1	5	PT-1	MC-1	
B203A	BALCONY	-	-	-	-	-	-	MC-1	
B204	GIFTED AND TALENTED	CPT-1	RB-1	WS-1	VWC-1	VWC-1	VWC-2	CL-1	WS-1 ON NORTH WALL FROM FLOOR TO 7'A.F.F.
B205	FIFTH GRADE	CPT-1	RB-1	VWC-1	VWC-1	WS-1	VWC-2	CL-1	WS-1 ON SOUTH WALL FROM FLOOR TO 7'A.F.F.
B206	FIFTH GRADE	CPT-1	RB-1	WS-1	VWC-1	VWC-1	VWC-2	CL-1	WS-1 ON NORTH WALL FROM FLOOR TO 7'A.F.F.
B207	FIFTH GRADE	CPT-1	RB-1	VWC-1	WS-1	VWC-2	VWC-1	CL-1	WS-1 ON EAST WALL FROM FLOOR TO 7'A.F.F.
B208	FIFTH GRADE	CPT-1	RB-1	VWC-1	VWC-1	VWC-2	WS-1	CL-1	WS-1 ON WEST WALL FROM FLOOR TO 7'A.F.F.
B209	FIFTH GRADE	CPT-1	RB-1	VWC-1	WS-1	VWC-2	VWC-1	CL-1	WS-1 ON EAST WALL FROM FLOOR TO 7'A.F.F.
B210	FIFTH GRADE	CPT-1	RB-1	VWC-1	VWC-1	VWC-2	WS-1	CL-1	WS-1 ON WEST WALL FROM FLOOR TO 7'A.F.F.

MATERIAL FINISH SCHEDULE

FLOORS:

LUXURY VINYL TILE	LVT-1	PATCRAFT; LINOCUT; MIRROR; 9"X36" (CLINIC, ISOLATION ROOM, OFFICES, MOTHERS ROOM, ART, LIFE SKILLS, ECSC & COACH OFFICE)
	LVT-2	(INNOVATION LAB, LIBRARY WORKROOM, MAKERSPACE)
	LVT-3	ALTERNATE #3, IN LIEU OF TRZ-1, MOHAWK MATUTO STONE FROST BITE STONE
	LVT-4	ATLERNATE #3, IN LIEU OF TRZ-2, MOHAWK MATUTO STONE SONIC SILVER STONE
	LVT-5	ALTERNATE #3, IN LIEU OF TRZ-3, MOHAWK MATUTO STONE BLUE NIGHT STONE
ATHLETIC FLOORING	AF-1	TARKETT SPORTS; OMNI SPORTS 8.1MM ACTIVE PLACE; CLASSIC OAK (GYM FIELD)
	AF-2	TARKETT SPORTS; OMNI SPORTS 8.1MM ACTIVE PLUS; BLUE MAPLE (GYM BORDER)
CARPET	CPT-1	SHAW CONTRACT; SHIFTING FIELD ENCLAVE TILE; STONE; 18"X36" (CLASSROOM, COLLAB FIELD & ADMIN)
	CPT-2	SHAW CONTRACT; SHIFTING FIELD ENCLAVE TILE: RESERVOIR: 18"X36" (COLLAB & CORRIDOR ACCENT)
	CPT-3	SHAW CONTRACT; CUT AND COMPOSE COPY TILE; SECTOR; 24"X24" (LIBRARY)
	CPT-4	SHAW CONTRACT; ALL ACCESS SWIFT; STEP 14549; 24"X24" (WALK OFF MAT)
SEALED CONCRETE	SC-1	STORAGE
EPOXY	EPF-1	STONHARD; STONSHIELD; ASH (RESTROOMS AND KITCHEN)
TERRAZZO	TRZ-1	TERRAZZO MARBLE & SUPPLY; SAND BED, TM21GG-790; INTEGRAL TERRAZZO BASE(FIELD)
	TRZ-2	TERRAZZO MARBLE & SUPPLY; SAND BED, TM20GG-1237; INTEGRAL TERRAZZO BASE (GRAY ACCENT)
	TRZ-3	TERRAZZO MARBLE & SUPPLY; EPOXY, TM20GG-1239; INTEGRAL TERRAZZO BASE (BLUE ACCENT)
WOOD	WD-1	NYDREEE; PLAINSAWN WHITE OAK; ANTIQUE BARREL; 5 1/4" (LEARNING STAIRS)

BASE:

RUBBER BASE	RB-1	ROPPE; BLACK BROWN; 4" (FIELD)
EPOXY BASE	EB-1	STONHARD; STONSHIELD; ASH; INTEGRAL EPOXY BASE (RESTROOMS AND KITCHEN)
TERRAZZO BASE	TRZ-1	MATCH TERRAZZO FLOOR COLOR, U.N.O.
SCHLUTER EDGE TRIM	SCH-1	PER SPECS

CEILINGS:

CL-1	ACT-1 ROCKFON; EDUCATION PLUS SQUARE; WHITE 42100 (FIELD)	
CL-2	ACT-2 ROCKFON; KOBAL (KITCHEN)	
CL-3	PAINTED GYPSUM; MOISTURE-RESISTANT GYP BD AT ANY WET LOCATIONS	
ROOF DECK	MC-1	EPIC METALS; COLONY MAPLE

CASEWORK:

PLASTIC LAMINATE	PL-1	WILSONART; 7996-36; NATURAL RECON (DOORS, CASEWORK & PSI WALL PANELS)
	PL-2	WILSONART; 4877-38; GREY MESH (COUNTERTOP)
	PL-3	FORMICA; 914-58; MARINE BLUE (WALL PANELS)
SOLID SURFACE	SS-1	CORIAN; CAMEO WHITE (TOP CAP OF LOW WALLS)
QUARTZ	QTZ-1	WILSONART; Q4011; ARASHI (COUNTERTOPS & WINDOW SILLS)

RAILINGS:

INFILL PANEL	R-1	BANKER; M13Z-145; FACTORY POWDER COATED FINISH (INTERIOR AND EXTERIOR GUARDRAIL & STAIR RISER AS NOTED), FINISH COLOR TBD

SPECIALTY PRODUCTS:

TOILET PARTITIONS	TP-1	SCRANTON: CHARCOAL GREY; ORANGE PEEL (TOILET PARTITIONS)
LOCKERS	L-1	LIST INDUSTRIES; 717 GRAND SLAM (KITCHEN LOCKERS)
WALL PADS	SP-1	COLOR TBD
WALL GRAPHIC	SP-5	TBD
MOTORIZED SHADES	MS-1	SHADE FABRIC COLOR TBD

WALLS:

PAINT	PT-1	SHERWIN WILLIAMS; SW7028; INCREDIBLE WHITE (FIELD)
	PT-2	SHERWIN WILLIAMS; SW7064; PASSIVE (ACCENT)
	PT-3	SHERWIN WILLIAMS; SW7650; ELLIE GRAY (ACCENT)
	PT-4	SHERWIN WILLIAMS; SW6991; BLACK MAGIC (DOOR FRAMES, WINDOW FRAMES & EXPOSED CEILING)
	PT-5	SHERWIN WILLIAMS; SW6493; EBBTIDE; LIGHT BLUE(ACCENT)
	PT-6	SHERWIN WILLIAMS; SW6804; DIGNITY BLUE; BLUE (SPIRIT COLOR)
VINYL WALL COVERING	VWC-1	KOROSEAL; DESERT SAND; LIGHT FOG (CLASSROOM FIELD)
	VWC-2	KOROSEAL; DESERT SAND; WASHED DENIM (CLASSROOM & CORRIDOR ACCENT)
	VWC-3	HUFFCOR: VINYL DESIGNER COLLECTION GEM PATTERNL; EGGSHELL 44-701 (BETWEEN CAFETERIA & GYM)
WRITABLE SURFACE	WS-1	KOROSEAL; MAG RITE NATURAL WHITE 59"; NATURAL WHITE (CLASSROOM & COLLABORATION)
TACKWALL	TW-1	TACKWALL; DIGNITY BLUE (CORRIDORS)
	TW-2	TACKWALL; 64227 2001 (COLLAB AREAS)
CORNER GUARD	CG-1	PER SPECS

FABRIC:

ACOUSTICAL WALL PANEL	AWP-1	AUTEX; CUBE; MURALLA; BLUE (GYM & CAFETERIA)
	AWP-2	AUTEX; CUBE; FALLING WATER; LIGHT BLUE (GYM & CAFETERIA)
	AWP-3	AUTEX; CUBE; SAVOYE; LIGHT GRAY (CAFETERIA)
STAGE CURTAINS	STG-1	KM FABRICS; MEMORABLE; 1053 (STAGE CURTAIN)
TACKBOARDS	TW-1	CARNEGIE; XOREL; 6427 751 (TACBOARD FOR CORRIDORS)
	TW-2	CARNEGIE; XOREL; 6427 2001 (TACKBOARD FOR COLLABORATION AREAS)
BAFFLES	AB-1	AUTEX; FRONTIER BAFFLES RAFT BLADE; EMPIRE (GYM CEILING)

TILE:

PORCELAIN TILE	WT-1	TRINITY TILE; ALTA; WHITE; 12"X24" (RESTROOM FIELD)
	WT-2	TRINITY TILE; ALTA; BLUE POLISHED; 12"X24" (RESTROOM ACCENT, CAFETERIA)
	WT-3	TRINITY TILE; ALTA; BLUE MATTE; 12"X24" (RESTROOM ACCENT)
	WT-4	TRINITY TILE; ALTA; BLUE POLISHED; 6"X24" (RESTROOM ACCENT)
	WT-5	TRINITY TILE; ALTA; BLUE MATTE; 6"X24" (RESTROOM ACCENT)
	WT-6	ESMER; BB CONCRETE; MIST; 12"X24" (SERVING LINE BACK WALL)
MOSAIC WALL TILE	MWT-1	MARAZZI; COASTAL EFFECTS; SAPPHIRE; LARGE PICKET MOSAIC 1"X4"; 11 1/4"X11 1/4" SHEET; INSTALL VERTICAL (BREAKROOM & COMMUNITY ROOM BACKSPLASH)
	MWT-2	ESMER; H2O; NAVY; 12"X12" MOSAIC SHEET, INSTALL VERTICAL (SERVING LINE COUNTER)
GROUT	G-1	COLOR TBD
	G-2	COLOR TBD
	G-3	COLOR TBD

**ALL GROUT LINES MUST BE SEALED TO BE NON-ABSORBENT.

EXTERIOR MATERIALS:

BRICK	B-1	NORMAN SIZE BRICK - CRIMSON IRONSPOT SMOOTH
	B-2	NORMAN SIZE BRICK - EBONY IRONSPOT SMOOTH
METAL PANEL	MP-1	BERRIDGE HR-16 PANEL SYSTEM - AGED BRONZE
	MP-2	BERRIDGE HS-12 - AGED BRONZE
LOUVER SCREEN	R-1	RUSKIN EV211 - COLOR TBD
MANUFACTURED STONE	MST-1	ARRISCRAFT 8" x 24" AND 12" x 24"; OAKRIDGE SMOOTH
FIBERGLASS REINFORCED PLASTIC PANEL(FRP)	FRP-1	COLOR TBD (CUSTODIAL WALLS)

GENERAL NOTE

1. ALL FINISH MATERIALS SHALL MEET THE FLAME SPREAD RATINGS PER THE BUILDING CODE.
2. REFER TO INTERIOR ELEVATIONS FOR SPECIFIC MATERIAL LOCATIONS.
3. PAINT ALL EXPOSED STRUCT. MEMBERS, STRUCT. DECK, DUCTWORK, DIFFUSERS, PIPING, CONDUIT, EQUIP. HOUSINGS, LIGHT FIXTURE HOUSINGS, CABLE SUPPORTS, CABLE TRAYS, EQUIP. SUPPORTS, HANGERS, ETC. TO MATCH ADJACENT SURFACES.
4. PAINT ALL NON-FACTORY FINISHED EXPOSED METAL.
5. REFER TO TYPICAL FLOORING TRANSITION DETAILS FOR FLOORING MATERIAL TRANSITIONS.
6. ALL FLOORING TRANSITIONS AT DOORS SHALL BE LOCATED UNDER THE DOOR IN THE CLOSED POSITION, U.N.O.
7. PROTECT ALL FINISHED FLOORING SURFACES FROM DAMAGE DURING ALL CONSTRUCTION PHASES.
8. PROVIDE AND INSTALL BULLNOSE TRIM AT ALL TRANSITIONS FROM CERAMIC WALL TILE TO OTHER MATERIAL U.N.O.
9. REFER TO REFLECTED CEILING PLANS FOR CEILING HEIGHTS.
10. ALL ELECTRICAL DEVICE COVERS ARE TO BE WHITE U.N.O.
11. ALL CARPET PATTERNS TO RUN PARALLEL TO CORRIDOR, U.N.O.
12. PAINT ALL HOLLOW METAL DOOR FRAMES TO MATCH ADJACENT WALL COLOR U.N.O.
13. ALL EXPOSED SPRINKLER PIPING TO BE PAINTED. COLOR TBD

DOOR SCHEDULE - SECOND FLOOR AREA 'B'

MARK	DOOR PANEL SIZE W	H	DOOR ELEVATION	DOOR MATERIAL	DOOR FRAME SIZE W	H	FRAME ELEVATION	FRAME MATERIAL	DETAILS SILL	JAMB	HEAD	H.W.	FIRE RATING LABEL	REMARKS
B202	6'-0"	6'-10"	D	WD	6'-4"	7'-0"	1	AL	18/A-733	04/A-732	15/A-732	700M		
B203A	6'-0"	7'-0 1/2"	D	AL	113'-10"	15'-0"	CW-11	AL	10/A-731	06/A-731	15/A-732	W714AI		
B204	3'-0"	6'-9 3/4"	A	WD	3'-4"	7'-0"	SF-7	AL	15/A-731	12/A-732	15/A-732	203		
B205	9'-6"	7'-0"	G	AL	9'-7"	7'-0 1/2"	SF-7 OPP.	AL	18/A-733	12/A-732	15/A-732	001		OPERABLE GLASS PARTITION: RE:SPECS
B206	9'-6"	7'-0"	G	AL	9'-7"	7'-0 1/2"	SF-7	AL	18/A-733	12/A-732	15/A-732	001		OPERABLE GLASS PARTITION: RE:SPECS
B207	3'-0"	6'-10"	A	WD	9'-4"	7'-0"	SF-7	AL	15/A-731	12/A-732	15/A-732	203		
B207A	9'-6"	7'-0"	G	AL	9'-7"	7'-0 1/2"	SF-7 OPP.	AL	18/A-733	12/A-732	17/A-731	001		OPERABLE GLASS PARTITION: RE:SPECS
B208	3'-0"	6'-10"	A	WD	9'-4"	7'-0"	SF-7	AL	15/A-731	12/A-732	15/A-732	203		
B208A	9'-6"	7'-0"	G	AL	9'-7"	7'-0 1/2"	SF-7	AL	18/A-733	12/A-732	17/A-731	001		OPERABLE GLASS PARTITION: RE:SPECS
B209	3'-0"	6'-9 3/4"	A	WD	9'-4"	7'-0"	SF-7	AL	15/A-731	12/A-732	15/A-732	203		
B209A	9'-6"	7'-0"	G	AL	9'-7"	7'-0 1/2"	SF-7 OPP.	AL	18/A-733	12/A-732	17/A-732	001		OPERABLE GLASS PARTITION: RE:SPECS
B210	3'-0"	6'-10"	A	WD	9'-4"	7'-0"	SF-7	AL	15/A-731	12/A-732	15/A-732	203		
B210A	9'-6"	7'-0"	G	AL	9'-7"	7'-0 1/2"	SF-7	AL	18/A-733	12/A-732	17/A-732	001		OPERABLE GLASS PARTITION: RE:SPECS
C201	3'-0"	6'-10"	B	AL	6'-2"	7'-0"	2	AL	15/A-731	12/A-732	17/A-732	701		
C202	3'-0"	6'-10"	B	AL	9'-1"	7'-0"	2	AL	15/A-731	12/A-732	17/A-732	203		
C210	3'-0"	6'-9 3/4"	A	WD	6'-2"	7'-0"	2	AL	15/A-731	12/A-732	17/A-732	701		

DOOR SCHEDULE REMARKS

1. PANIC EXIT HARDWARE
2. NOT AN ENTRY DOOR, EXIT ONLY DOOR WITH LOCKING OPERABLE HARDWARE ON SWING-OUT SIDE OF DOOR
3. NO LOCKING HARDWARE
4. ELEC. DOOR OPENER
5. ELEC. CONTROLLED ACCESS HARDWARE WITH CARD READER
6. ELEC. CONTROLLED ACCESS HARDWARE WITH PUSH-BUTTON
7. ELEC. CONTROLLED ACCESS HARDWARE, ROUGH-IN ONLY
8. KEYED REMOVABLE CENTER MULLION
9. CENTER ASTRAGAL
10. 180 DEGREE SWING
11. CONT. HINGE
12. WEATHER-STRIP SEAL
13. FIRE SMOKE SEAL
14. SOUND SEAL
15. PEEP HOLE
16. DOOR BUZZER
17. DOOR CHIME ON OPEN
18. MANUAL HOLD-OPEN
19. MAGNETIC HOLD-OPEN, CONNECT TO FIRE ALARM
20. MAGNETIC HOLD-OPEN, CONNECT TO SECURITY SYSTEM
21. NSULATED DOOR
22. SOUND RATED DOOR ASSEMBLY, STC AS SPECIFIED
23. WINDSTORM DOOR HARDWARE SHALL BE TESTED AS PART OF A COMPLETE DOOR OPENING ASSEMLBY. THE TESTED DOOR OPENING ASSEMBLY SHALL INCLUDE DOOR HARDWARE. THE ENTIRE DOOR OPENING, INCLUDING DOOR HARDWARE, SHALL BE BY DOOR MANUF.
24. ACOUSTICAL GLASS TO MEET FIRE DOOR ASSEMBLY REQUIREMENTS FOR FIRE RATING INDICATED
25. MANUAL PUSH-UP OPERATION
26. ELEC MOTOR OPERATION WITH KEY SWITCH CONTROL, KEY SWITCH ON ONE SIDE OF DOOR ONLY
27. ELEC MOTOR OPERATION WITH KEY SWITCH CONTROL, KEY SWITCH ON BOTH SIDES OF DOOR
28. ELEC MOTOR OPERATION WITH PUSH-BUTTON CONTROL ON ONE SIDE OF DOOR ONLY
29. PANIC EXIT PUSH-BUTTON ON ONE SIDE OF DOOR ONLY
30. AUTOMATIC OPEN ON FIRE ALARM ACTIVATION
31. AUTOMATIC CLOSE ON FIRE ALARM ACTIVATION
32. FAIL SAFE IN OPEN POSITION
33. FAIL SAFE IN CLOSED POSITION
34. MAXIMUM OCCUPANCY SIGNAGE NEAR DOOR
35. SIGNAGE ON DOOR TO READ "NOT AN EXIT"

GLAZING SCHEDULE - AREA B - SECOND FLOOR

MARK	FRAME WIDTH	HEIGHT	ELEVATION	FRAME MATERIAL	DETAILS SILL	JAMB	HEAD	REMARKS
B103	71'-1 1/2"	9'-7"	SF-18	ALUM	01/A-731	07/A-731		
B203	113'-10"	15'-0"	CW-11	ALUM	04/A-731	09/A-731	18/A-731	
B204	9'-6"	7'-0"	SF-7	ALUM	14/A-732	12/A-732	18/A-732	
B204B	10'-0"	4'-8"	SF-15 SIM	ALUM	01/A-731	07/A-731	13/A-731	
B205B	12'-0"	4'-8"	SF-15 SIM	ALUM	01/A-731	07/A-731	13/A-731	
B206B	12'-0"	6'-8"	SF-15 SIM	ALUM	03/7-731	07/A-731	13/A-731	2
B207	9'-6"	7'-0"	SF-7	ALUM	14/A-732	12/A-732	18/A-732	
B208	9'-6"	7'-0"	SF-7	ALUM	14/A-732	12/A-732	18/A-732	
B209	9'-6"	7'-0"	SF-7	ALUM	14/A-732	12/A-732	18/A-732	
B210	9'-6"	7'-0"	SF-7	ALUM	14/A-732	12/A-732	18/A-732	
C201	6'-2 1/2"	7'-0"	SF-11	ALUM	14/A-732	12/A-732 SIM	18/A-732	
C202	9'-1"	7'-0"	SF-7	ALUM	14/A-732	12/A-732	18/A-732	
C210	6'-2 1/2"	7'-0"	SF-11	ALUM	14/A-732	12/A-732 SIM	18/A-732	
C210B	29'-11 3/4"	7'-0"	SF-12	ALUM	13/A-732	18/A-732 SIM	18/A-732	

GLAZING SCHEDULE REMARKS

1. PROVIDE MOTORIZED WINDOW SHADES: REFER TO ELECTRICAL DRAWINGS
2. PROVIDE MANUALLY OPERATED WINDOW SHADES
3. REFER TO A-809 FOR FRAME ELEVATION

0"
1"

2ND LEVEL - SCHEDULES - AREA B
A-102B1
FOR BLUEBEAM LABELING/OCR:

File Path: C:_Revit\Local\20380_FISD CLINE ES_ARCH_R21_JiKim.rvt

CHECKED BY: DL
DRAWN BY: Author
Plot Stamp: 1/12/2022 1:47:42 PM

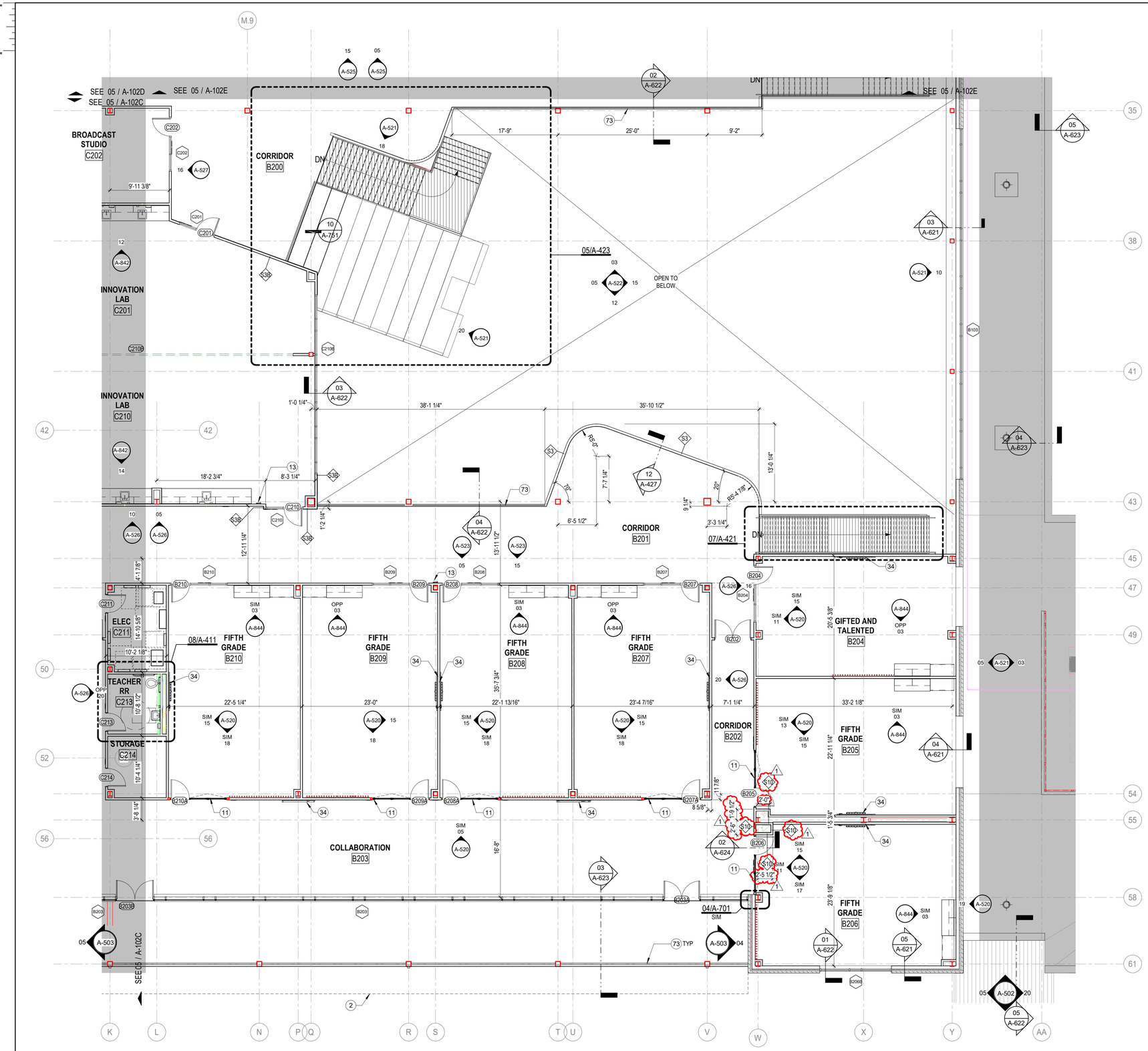

05 2ND LEVEL - FLOOR PLAN - AREA B
1/8" = 1'-0"

GENERAL ARCH PLAN NOTES

1. DO NOT SCALE DRAWINGS, WRITTEN DIMENSIONS TAKE PRECEDENCE, CONTACT ARCH IF CLARIFICATION IS NECESSARY IN ORDER TO DETERMINE THE INTENT OF THE CONTRACT DOCUMENTS
2. DRAWINGS NOTED AS "N.T.S" OR "NTS" ARE NOT TO SCALE
3. ALL DIMENSIONS ARE TO STRUCTURAL COLUMN LINES OR STUD OF PARTITION ASSEMBLY U.N.O.
4. FIELD VERIFY ALL DIMENSIONS AND EXISTING CONDITIONS BEFORE COMMENCING WORK. NOTIFY ARCH. OF ANY DISCREPANCIES PRIOR TO PROCEEDING WITH AFFECTED WORK
5. NOTES OR DIMENSIONS NOTED AS "TYPICAL" OR "TYP." OR "TYP" SHALL APPLY TO CONDITIONS THAT ARE THE SAME OR SIMILAR
6. DIMENSIONS NOTED AS "FIELD VERIFY" OR "V.I.F." OR "VIF" SHALL BE MEASURED AND CONFIRMED AT THE PROJECT SITE BY THE CONTRACTOR AND REVIEWED WITH THE ARCH. BEFORE INCORPORATING INTO THE WORK
7. DIMENSIONS NOTED AS "CLEAR" OR "CLEAR INSIDE" REQUIRE SPECIFIC COORDINATION AMONG DISCIPLINES AND OR MANUFACTURERS
8. REFER TO PARTITION TYPES ON A-800 SERIES SHEETS
9. ALL INTERIOR PARTITIONS THIS SHEET, EXCEPT FOR FURR-OUT PARTITIONS, SHALL BE PARTITION TYPE S3 U.N.O.
10. ALL INTERIOR FURR-OUT PARTITIONS THIS SHEET SHALL BE PARTITION TYPE S5 U.N.O.
11. ALIGN FINISHED FACE OF WALLS WHERE WALL PARTITIONS OF DIFFERING THICKNESS ABUT AND OR ADJOIN IN THE SAME PLANE
12. PROVIDE AND INSTALL CONT. REVEAL TRIM AT JOINT WHERE GYPSUM BOARD WALL PARTITIONS ABUT AND OR ADJOIN MASONRY WALL PARTITIONS IN THE SAME PLANE
13. ALL INTERIOR CMU OUTSIDE CORNERS SHALL HAVE BULLNOSE U.N.O.
14. ALL DOORS SHALL BE SET 6 INCHES OFF THE ADJACENT PERPENDICULAR WALL ON THE HINGE SIDE OF THE DOOR U.N.O., NOTIFY ARCH. OF ANY DOOR-RELATED CONFLICTS, INCLUDING BUT NOT LIMITED TO CONFLICTS CONCERNING ACCESSIBILITY STANDARDS
15. ALL DOOR THRESHOLDS AT ALL EXTERIOR DOORS SHALL BE SET IN FULL BED OF SEALANT
16. COORD. ALL ROOF DRAIN LEADER LOCATIONS WITH FLOOR PLAN PRIOR TO FLOOR SLAB CONSTRUCTION
17. ALL FLOOR SLOPES TO FLOOR DRAINS SHALL NOT EXCEED 1:48
18. PROVIDE AND INSTALL SELF-LEVELING UNDERLAYMENT WHERE UNEVEN FLOOR SLAB EXISTS PRIOR TO INSTALLATION OF FLOOR FINISHES
19. COORD. HOUSEKEEPING PAD LOCATIONS AND DIMENSIONS WITH EQUIPMENT TO BE INSTALLED
20. ALL FLOOR FINISH CHANGES SHALL OCCUR AT THE CENTERLINE OF DOORS U.N.O.
21. ALL FLOOR FINISH MATERIAL CHANGES SHALL HAVE REDUCER STRIPS
22. ALL REQUIRED ACCESSIBLE CLEARANCES FOR ALL ITEMS, INCLUDING BUT NOT LIMITED TO ALL COUNTER TOPS, ALL PLUMBING FIXTURES, ALL DRINKING FOUNTAINS, ALL ELECTRIC WATER COOLERS, ALL LAVATORIES, ALL URINALS, ALL TOILETS SHALL BE STRICTLY ENFORCED
23. APPLY BITUMINOUS COATING TO ALL CONCEALED STRUCTURAL STEEL MEMBERS AT ALL EXTERIOR CANOPY LOCATIONS
24. REFER TO OTHER DISCIPLINE DOCUMENTS FOR ADDITIONAL SCOPE OF WORK

KEYNOTE LEGEND

NUMBER	DESCRIPTION
2	LINE OF ROOF OR CANOPY ABOVE
4	LINE OF FURRDOWN ABOVE
11	OPERABLE GLASS PARTITION
13	RECESSED FIRE EXTINGUISHER CABINET WITH EXTINGUISHER
34	SMART PANEL, OFCI
73	GUARDRAIL TYPE A, RE: 05/A425

PBK

ARCHITECT PBK Architects, Inc.
HOUSTON PBK.com
11 Greenway Plaza, 22nd Floor
Houston, TX 77046
713-965-0608 P
713-961-4571 F
TX Firm: BR 1608

CIVIL
DIG ENGINEERS
T 713 940 3238
STRUCTURAL
KUBALA ENGINEERS
T 800 248 3674
MEP/T
LEAF ENGINEERS
T 713 940 3300
FOOD SERVICE
FOODSERVICE DESIGN PROFESSIONALS
T 281 350 2323
BUILDING ENVELOPE
BEAM
T 713 940 3201

CLINE ELEMENTARY SCHOOL CAMPUS REPLACEMENT

1550 WEST BOULEVARD, FRIENDSWOOD, TX 77546

ISSUE FOR CSP

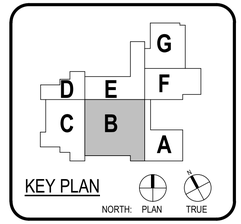

REGISTERED ARCHITECT MELISSA TURNBOUGH 21777 STATE OF TEXAS

Melissa Turnbough

DEC 17 2021

CLIENT
FRIENDSWOOD ISD

DATE	PROJECT NUMBER
DECEMBER 17, 2021	20380

DRAWING HISTORY

No.	Description	Date
1	ADDENDUM #1	01/12/2022

ISSUE FOR CSP

2ND LEVEL - FLOOR PLAN - AREA B

A-102B

2ND LEVEL - FLOOR PLAN - AREA B

A-102B

FOR BLUEBEAM LABELING/OCR:

File Path: C:_Revit\Local\20380_FISD CLINE ES_ARCH_R21_JIKim.rvt

CHECKED BY:
DL
DRAWN BY:
Author
Plot Stamp:
1/12/2022 9:40:48 AM

PBK

ARCHITECT PBK Architects, Inc.
HOUSTON PBK.com
11 Greenway Plaza, 22nd Floor
Houston, TX 77046
713-965-0608 P
713-961-4571 F
TX Firm: BR 1608

CIVIL
DIG ENGINEERS
T 713 940 3238
STRUCTURAL
KUBALA ENGINEERS
T 800 248 3874
MEP
LEAF ENGINEERS
T 713 940 3300
FOOD SERVICE
FOODSERVICE DESIGN PROFESSIONALS
T 281 350 2323
BUILDING ENVELOPE
BEAM
T 713 940 3201

CLINE ELEMENTARY SCHOOL CAMPUS REPLACEMENT

1550 WEST BOULEVARD, FRIENDSWOOD, TX 77546

ISSUE FOR CSP

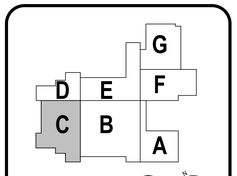

KEY PLAN

NORTH: PLAN TRUE

REGISTERED ARCHITECT MELISSA TURNBAUGH 21779 STATE OF TEXAS

Melissa Turnbaugh

Dec 17, 2021

CLIENT
FRIENDSWOOD ISD

DATE	PROJECT NUMBER
DECEMBER 17, 2021	20380

DRAWING HISTORY

No.	Description	Date
1	ADDENDUM #1	01/12/2022

ISSUE FOR CSP

BUILDING NUMBER

2ND LEVEL - SCHEDULES - AREA C

A-102C1

ROOM FINISH SCHEDULE

ROOM DATA №	ROOM DATA NAME	FLOOR FINISH	BASE FINISH	WALL FINISHES NORTH	EAST	SOUTH	WEST	CEILINGS FINISH	REMARKS
C200	CORRIDOR	CPT-1	RB-1	PT-1	PT-1	PT-1	PT-1	MC-1	REFER TO CEILING PLAN FOR CL-1
C201	INNOVATION LAB	LVT-2	RB-1	PT-1	PT-1	PT-1	PT-6	CL-1	WS-1 ON WEST WALL FROM FLOOR TO 7'A.F.F.
C201A	STORAGE	SC-1	RB-1	PT-1	PT-1	PT-1	PT-1	CL-1	
C202	BROADCAST STUDIO	CPT-1	RB-1	PT-1	PT-6	PT-1	PT-6	CL-1	WS-1 ON NORTH WALL FROM FLOOR TO 7'A.F.F.
C203	A/V BOOTH	CPT-1	RB-1	PT-1	PT-1	PT-1	PT-1	CL-1	
C204	IDF	SC-1	RB-1	PT-1	PT-1	PT-1	PT-1	-	1 HR. RATED; RATED PLYWOOD ON ALL WALLS
C205	SRP	CPT-1	RB-1	VWC-1	VWC-1	VWC-1	VWC-1	CL-1	WS-1 ON EAST WALL FROM FLOOR TO 7'A.F.F.
C206	RESOURCE	CPT-1	RB-1	VWC-1	VWC-1	VWC-1	VWC-1	CL-1	
C207	DIAG	CPT-1	RB-1	VWC-1	VWC-1	VWC-1	VWC-1	CL-1	
C208	LSSP	CPT-1	RB-1	VWC-1	VWC-1	VWC-1	VWC-1	CL-1	
C209	ASSISTANT PRINCIPAL	CPT-1	RB-1	PT-1	PT-1	PT-1	PT-1	CL-1	
C210	INNOVATION LAB	LVT-2	RB-1	PT-1	PT-1	PT-1	PT-6	CL-1	WS-1 ON WEST WALL FROM FLOOR TO 7'A.F.F.
C210A	STORAGE	SC-1	RB-1	PT-1	PT-1	PT-1	PT-1	CL-1	
C211	ELEC	SC-1	RB-1	PT-1	PT-1	PT-1	PT-1	-	
C212	CORRIDOR	CPT-2	RB-1	PT-1	PT-1	PT-1	PT-1	CL-1	
C213	TEACHER RR	EPF-1	EB-1	WT-1	WT-1	WT-1	WT-1	CL-3	REFERENCE RESTROOM ELEVATIONS FOR TILE LOCATIONS TYP.
C214	STORAGE	SC-1	RB-1	PT-1	PT-1	PT-1	PT-1	CL-1	
C215	FIFTH GRADE	CPT-1	RB-1	VWC-1	VWC-2	VWC-1	WS-1	CL-1	WS-1 ON NORTH WALL FROM FLOOR TO 7'A.F.F.
C216	MOTOR LAB	LVT-1	RB-1	VWC-1	VWC-1	VWC-1	VWC-1	CL-1	WS-1 ON NORTH WALL FROM FLOOR TO 7'A.F.F.
C217	OT / PT	CPT-1	RB-1	PT-1	PT-1	PT-1	PT-1	CL-1	
C218	COMPUTER TECH. STORAGE	SC-1	RB-1	PT-1	PT-1	PT-1	PT-1	CL-1	
C219	LITERACY LIBRARY	LVT-1	RB-1	PT-1	PT-1	PT-1	PT-1	CL-1	
C220	IDF	SC-1	RB-1	PT-1	PT-1	PT-1	PT-1	-	1 HR. RATED; RATED PLYWOOD ON ALL WALLS
C221	STAIR D	SC-1	RB-1	PT-1	PT-1	PT-1	PT-1	CL-1	
C223	RR	EPF-1	EB-1	WT-1	WT-1	WT-1	WT-1	CL-3	REFERENCE RESTROOM ELEVATIONS FOR TILE LOCATIONS TYP.
C224	RR	EPF-1	EB-1	WT-1	WT-1	WT-1	WT-1	CL-3	REFERENCE RESTROOM ELEVATIONS FOR TILE LOCATIONS TYP.
C225	ELEVATOR	SC-1	RB-1	-	-	-	-	-	REFERENCE MANUFACTURER'S SPECIFICATIONS FOR ALL ELEVATOR FINISHES
C226	TEACHER RR	EPF-1	EB-1	WT-1	WT-1	WT-1	WT-1	CL-3	REFERENCE RESTROOM ELEVATIONS FOR TILE LOCATIONS TYP.
C227	CORRIDOR	CPT-2	RB-1	PT-1	PT-1	PT-1	PT-1	CL-1	
C228	COLLABORATION	CPT-1	RB-1	PT-1	PT-1	PT-1	PT-1	MC-1	
C228A	BALCONY	-	RB-1	-	-	-	-	MC-1	
C229	FOURTH GRADE	CPT-1	RB-1	VWC-2	VWC-1	VWC-1	WS-1	CL-1	WS-1 ON WEST WALL FROM FLOOR TO 7'A.F.F.
C230	FOURTH GRADE	CPT-1	RB-1	VWC-2	WS-1	VWC-1	VWC-1	CL-1	WS-1 ON EAST WALL FROM FLOOR TO 7'A.F.F.
C231	FOURTH GRADE	CPT-1	RB-1	VWC-1	VWC-1	WS-1	VWC-2	CL-1	WS-1 ON SOUTH WALL FROM FLOOR TO 7'A.F.F.
C232	FOURTH GRADE	CPT-1	RB-1	VWC-1	VWC-1	WS-1	VWC-2	CL-1	WS-1 ON SOUTH WALL FROM FLOOR TO 7'A.F.F.
C233	FOURTH GRADE	CPT-1	RB-1	WS-1	VWC-1	VWC-1	VWC-2	CL-1	WS-1 ON NORTH WALL FROM FLOOR TO 7'A.F.F.
D203A	CUSTODIAL	SC-1	RB-1	PT-1	PT-1	PT-1	PT-1	-	

MATERIAL FINISH SCHEDULE

FLOORS:

LUXURY VINYL TILE	LVT-1	PATCRAFT; LINOCUT; MIRROR; 9"X36" (CLINIC, ISOLATION ROOM, OFFICES, MOTHERS ROOM, ART, LIFE SKILLS, ECSC & COACH OFFICE)
	LVT-2	(INNOVATION LAB, LIBRARY WORKROOM, MAKERSPACE)
	LVT-3	ALTERNATE #3, IN LIEU OF TRZ-1, MOHAWK MATUTO STONE FROST BITE STONE
	LVT-4	ATLERNATE #3, IN LIEU OF TRZ-2, MOHAWK MATUTO STONE SONIC SILVER STONE
	LVT-5	ALTERNATE #3, IN LIEU OF TRZ-3, MOHAWK MATUTO STONE BLUE NIGHT STONE
ATHLETIC FLOORING	AF-1	TARKETT SPORTS; OMNI SPORTS 8.1MM ACTIVE PLACE; CLASSIC OAK (GYM FIELD)
	AF-2	TARKETT SPORTS; OMNI SPORTS 8.1MM ACTIVE PLUS; BLUE MAPLE (GYM BORDER)
CARPET	CPT-1	SHAW CONTRACT; SHIFTING FIELD ENCLAVE TILE; STONE; 18"X36" (CLASSROOM, COLLAB FIELD & ADMIN)
	CPT-2	SHAW CONTRACT; SHIFTING FIELD ENCLAVE TILE: RESERVOIR: 18"X36" (COLLAB & CORRIDOR ACCENT)
	CPT-3	SHAW CONTRACT; CUT AND COMPOSE COPY TILE; SECTOR; 24"X24" (LIBRARY)
	CPT-4	SHAW CONTRACT; ALL ACCESS SWIFT; STEP 14549; 24"X24" (WALK OFF MAT)
SEALED CONCRETE	SC-1	STORAGE
EPOXY	EPF-1	STONHARD; STONSHIELD; ASH (RESTROOMS AND KITCHEN)
TERRAZZO	TRZ-1	TERRAZZO MARBLE & SUPPLY; SAND BED, TM21GG-790; INTEGRAL TERRAZZO BASE(FIELD)
	TRZ-2	TERRAZZO MARBLE & SUPPLY; SAND BED, TM20GG-1237; INTEGRAL TERRAZZO BASE (GRAY ACCENT)
	TRZ-3	TERRAZZO MARBLE & SUPPLY; EPOXY, TM20GG-1239; INTEGRAL TERRAZZO BASE (BLUE ACCENT)
WOOD	WD-1	NYDREEE; PLAINSAWN WHITE OAK; ANTIQUE BARREL; 5 1/4" (LEARNING STAIRS)

BASE:

RUBBER BASE	RB-1	ROPPE; BLACK BROWN; 4" (FIELD)
EPOXY BASE	EB-1	STONHARD; STONSHIELD; ASH; INTEGRAL EPOXY BASE (RESTROOMS AND KITCHEN)
TERRAZZO BASE	TRZ-1	MATCH TERRAZZO FLOOR COLOR, U.N.O.
SCHLUTER EDGE TRIM	SCH-1	PER SPECS

CEILINGS:

CL-1	ACT-1 ROCKFON; EDUCATION PLUS SQUARE; WHITE 42100 (FIELD)	
CL-2	ACT-2 ROCKFON; KOBAL (KITCHEN)	
CL-3	PAINTED GYPSUM; MOISTURE-RESISTANT GYP BD AT ANY WET LOCATIONS	
ROOF DECK	MC-1	EPIC METALS; COLONY MAPLE

CASEWORK:

PLASTIC LAMINATE	PL-1	WILSONART; 7996-38; NATURAL RECON (DOORS, CASEWORK & PSI WALL PANELS)
	PL-2	WILSONART; 4877-38; GREY MESH (COUNTERTOP)
	PL-3	FORMICA; 914-58; MARINE BLUE (WALL PANELS)
SOLID SURFACE	SS-1	CORIAN; CAMEO WHITE (TOP CAP OF LOW WALLS)
QUARTZ	QTZ-1	WILSONART; Q4011; ARASHI (COUNTERTOPS & WINDOW SILLS)

RAILINGS:

INFILL PANEL	R-1	BANKER; M13Z-145; FACTORY POWDER COATED FINISH (INTERIOR AND EXTERIOR GUARDRAIL & STAIR RISER AS NOTED), FINISH COLOR TBD

SPECIALTY PRODUCTS:

TOILET PARTITIONS	TP-1	SCRANTON; CHARCOAL GREY; ORANGE PEEL (TOILET PARTITIONS)
LOCKERS	L-1	LIST INDUSTRIES; 717 GRAND SLAM (KITCHEN LOCKERS)
WALL PADS	SP-1	COLOR TBD
WALL GRAPHIC	SP-5	TBD
MOTORIZED SHADES	MS-1	SHADE FABRIC COLOR TBD

WALLS:

PAINT	PT-1	SHERWIN WILLIAMS; SW7028; INCREDIBLE WHITE (FIELD)
	PT-2	SHERWIN WILLIAMS; SW7064; PASSIVE (ACCENT)
	PT-3	SHERWIN WILLIAMS; SW7650; ELLIE GRAY (ACCENT)
	PT-4	SHERWIN WILLIAMS; SW6991; BLACK MAGIC (DOOR FRAMES, WINDOW FRAMES & EXPOSED CEILING)
	PT-5	SHERWIN WILLIAMS; SW6493; EBBTIDE; LIGHT BLUE(ACCENT)
	PT-6	SHERWIN WILLIAMS; SW6804; DIGNITY BLUE; BLUE (SPIRIT COLOR)
VINYL WALL COVERING	VWC-1	KOROSEAL; DESERT SAND; LIGHT FOG (CLASSROOM FIELD)
	VWC-2	KOROSEAL; DESERT SAND; WASHED DENIM (CLASSROOM & CORRIDOR ACCENT)
	VWC-3	HUFFCOR: VINYL DESIGNER COLLECTION GEM PATTERNL; EGGSHELL 44-701 (BETWEEN CAFETERIA & GYM)
WRITABLE SURFACE	WS-1	KOROSEAL; MAG RITE NATURAL WHITE 59"; NATURAL WHITE (CLASSROOM & COLLABORATION)
TACKWALL	TW-1	TACKWALL; DIGNITY BLUE (CORRIDORS)
	TW-2	TACKWALL; 64227 2001 (COLLAB AREAS)
CORNER GUARD	CG-1	PER SPECS

FABRIC:

ACOUSTICAL WALL PANEL	AWP-1	AUTEX; CUBE; MURALLA; BLUE (GYM & CAFETERIA)
	AWP-2	AUTEX; CUBE; FALLING WATER; LIGHT BLUE (GYM & CAFETERIA)
	AWP-3	AUTEX; CUBE; SAVOYE; LIGHT GRAY (CAFETERIA)
STAGE CURTAINS	STG-1	KM FABRICS; MEMORABLE; 1053 (STAGE CURTAIN)
TACKBOARDS	TW-1	CARNEGIE; XOREL; 6427 751 (TACBOARD FOR CORRIDORS)
	TW-2	CARNEGIE; XOREL; 6427 2001 (TACKBOARD FOR COLLABORATION AREAS)
BAFFLES	AB-1	AUTEX; FRONTIER BAFFLES RAFT BLADE; EMPIRE (GYM CEILING)

TILE:

PORCELAIN TILE	WT-1	TRINITY TILE; ALTA; WHITE; 12"X24" (RESTROOM FIELD)
	WT-2	TRINITY TILE; ALTA; BLUE POLISHED; 12"X24" (RESTROOM ACCENT, CAFETERIA)
	WT-3	TRINITY TILE; ALTA; BLUE MATTE; 12"X24" (RESTROOM ACCENT)
	WT-4	TRINITY TILE; ALTA; BLUE POLISHED; 6"X24" (RESTROOM ACCENT)
	WT-5	TRINITY TILE; ALTA; BLUE MATTE; 6"X24" (RESTROOM ACCENT)
	WT-6	ESMER; BB CONCRETE; MIST; 12"X24" (SERVING LINE BACK WALL)
MOSAIC WALL TILE	MWT-1	MARAZZI; COASTAL EFFECTS; SAPPHIRE; LARGE PICKET MOSAIC 1"X4"; 11 1/4"X11 1/4" SHEET; INSTALL VERTICAL (BREAKROOM & COMMUNITY ROOM BACKSPLASH)
	MWT-2	ESMER; H2O; NAVY; 12"X12" MOSAIC SHEET; INSTALL VERTICAL (SERVING LINE COUNTER)
GROUT	G-1	COLOR TBD
	G-2	COLOR TBD
	G-3	COLOR TBD

**ALL GROUT LINES MUST BE SEALED TO BE NON-ABSORBENT.

EXTERIOR MATERIALS:

BRICK	B-1	NORMAN SIZE BRICK - CRIMSON IRONSPOT SMOOTH
	B-2	NORMAN SIZE BRICK - EBONY IRONSPOT SMOOTH
METAL PANEL	MP-1	BERRIDGE HR-16 PANEL SYSTEM - AGED BRONZE
	MP-2	BERRIDGE HS-12 - AGED BRONZE
LOUVER SCREEN	R-1	RUSKIN EV211 - COLOR TBD
MANUFACTURED STONE	MST-1	ARRISCRAFT 8" x 24" AND 12" x 24"; OAKRIDGE SMOOTH
FIBERGLASS REINFORCED PLASTIC PANEL(FRP)	FRP-1	COLOR TBD (CUSTODIAL WALLS)

GENERAL NOTE

1. ALL FINISH MATERIALS SHALL MEET THE FLAME SPREAD RATINGS PER THE BUILDING CODE.
2. REFER TO INTERIOR ELEVATIONS FOR SPECIFIC MATERIAL LOCATIONS.
3. PAINT ALL EXPOSED STRUCT. MEMBERS, STRUCT. DECK, DUCTWORK, DIFFUSERS, PIPING, CONDUIT, EQUIP. HOUSINGS, LIGHT FIXTURE HOUSINGS, CABLE SUPPORTS, CABLE TRAYS, EQUIP. SUPPORTS, HANGERS, ETC. TO MATCH ADJACENT SURFACES.
4. PAINT ALL NON-FACTORY FINISHED EXPOSED METAL.
5. REFER TO TYPICAL FLOORING TRANSITION DETAILS FOR FLOORING MATERIAL TRANSITIONS.
6. ALL FLOORING TRANSITIONS AT DOORS SHALL BE LOCATED UNDER THE DOOR IN THE CLOSED POSITION, U.N.O.
7. PROTECT ALL FINISHED FLOORING SURFACES FROM DAMAGE DURING ALL CONSTRUCTION PHASES.
8. PROVIDE AND INSTALL BULLNOSE TRIM AT ALL TRANSITIONS FROM CERAMIC WALL TILE TO OTHER MATERIAL U.N.O.
9. REFER TO REFLECTED CEILING PLANS FOR CEILING HEIGHTS.
10. ALL ELECTRICAL DEVICE COVERS ARE TO BE WHITE U.N.O.
11. ALL CARPET PATTERNS TO RUN PARALLEL TO CORRIDOR, U.N.O.
12. PAINT ALL HOLLOW METAL DOOR FRAMES TO MATCH ADJACENT WALL COLOR U.N.O.
13. ALL EXPOSED SPRINKLER PIPING TO BE PAINTED. COLOR TBD

DOOR SCHEDULE - SECOND FLOOR AREA 'C'

MARK	DOOR PANEL SIZE W x H W	H	DOOR ELEVATION	DOOR MATERIAL	DOOR FRAME SIZE W x H W	H	FRAME ELEVATION	FRAME MATERIAL	DETAILS SILL	JAMB	HEAD	H.W.	FIRE RATING LABEL	REMARKS
B203B	6'-2 1/2"	7'-0 1/2"	D	AL	113'-10"	15'-0"	CW-11	AL	10/A-731	06/A-731	15/A-732	W714AI		
C201A	3'-0"	6'-10"	A	WD	3'-4"	7'-0"	1	AL	18/A-733	04/A-732	09/A-732	203		
C203	3'-0"	6'-10"	A	WD	3'-4"	7'-0"	1	AL	18/A-733	04/A-732	09/A-732	503		
C204	3'-0"	6'-10"	A	WD	3'-4"	7'-0"	1	AL	18/A-733	04/A-732	09/A-732	201	2HR	
C205	3'-0"	6'-10"	A	WD	3'-4"	7'-0"	1	AL	18/A-733	04/A-732	09/A-732	103		
C206	3'-0"	6'-10"	A	WD	3'-4"	7'-0"	1	AL	18/A-733	04/A-732	09/A-732	103		
C207	3'-0"	6'-10"	A	WD	3'-4"	7'-0"	1	AL	18/A-733	04/A-732	09/A-732	103		
C208	3'-0"	6'-10"	A	WD	3'-4"	7'-0"	1	AL	18/A-733	04/A-732	09/A-732	103		
C209	3'-0"	6'-10"	A	WD	3'-4"	7'-0"	1	AL	18/A-733	04/A-732	09/A-732	103		
C210A	3'-0"	6'-10"	A	WD	3'-4"	7'-0"	1	AL	18/A-733	04/A-732	09/A-732	203		
C210B	46'-0"	10'-0"	-		46'-0"	10'-0"	-	-	09/A-733	14/A-733	19/A-733	001		MOTORIZED FOLDING PARTITION
C211	3'-0"	6'-10"	A	WD	3'-4"	7'-0"	1	AL	18/A-733	04/A-732	09/A-732	201		
C212	6'-0"	6'-10"	D	WD	6'-4"	7'-0"	1	AL	18/A-733	04/A-732	15/A-732	700M		
C213	3'-0"	6'-10"	A	WD	3'-4"	7'-0"	1	AL	18/A-733	04/A-732	09/A-732	241		
C214	3'-0"	6'-10"	A	WD	3'-4"	7'-0"	1	AL	18/A-733	04/A-732	09/A-732	203		
C215	9'-6"	7'-0"	G	AL	9'-7"	7'-0 1/2"	SF-7 OPP.	AL	18/A-733	12/A-732	15/A-732	001		OPERABLE GLASS PARTITION: RE:SPECS
C216	3'-0"	6'-10"	A	WD	3'-4"	7'-0"	1	AL	18/A-733	04/A-732	09/A-732	203		
C217	3'-0"	6'-10"	A	WD	3'-4"	7'-0"	1	AL	18/A-733	04/A-732	09/A-732	103		
C218	3'-0"	6'-10"	A	WD	3'-4"	7'-0"	1	AL	18/A-733	04/A-732	09/A-732	203		
C219	3'-0"	6'-10"	A	WD	3'-4"	7'-0"	1	AL	18/A-733	04/A-732	09/A-732	203		
C220	3'-0"	6'-10"	A	WD	3'-4"	7'-0"	1	AL	18/A-733	04/A-732	09/A-732	C201	2HR	5
C221	6'-0"	6'-10"	D	WD	6'-4"	7'-0"	1	AL	18/A-733	04/A-732	09/A-732	738R	1HR	
C226	3'-0"	6'-10"	A	WD	3'-4"	7'-0"	1	AL	18/A-733	04/A-732	09/A-732	241		
C227	6'-0"	6'-10"	D	WD	6'-4"	7'-0"	1	AL	18/A-733	04/A-732	15/A-732	700M		
C228A	6'-2 1/2"	7'-0 1/2"	D	AL	81'-6"	15'-0"	CW-10	AL	10/A-731	06/A-731	15/A-732	W714AI		
C228B	6'-2 1/2"	7'-0 1/2"	D	AL	81'-6"	15'-0"	CW-10	AL	10/A-731	06/A-731	15/A-732	W714AI		
C229	9'-6"	7'-0"	G	AL	9'-7"	7'-0 1/2"	SF-7 OPP.	AL	18/A-733	12/A-732	15/A-732	001		OPERABLE GLASS PARTITION: RE:SPECS
C230	9'-6"	7'-0"	G	AL	9'-7"	7'-0 1/2"	SF-7	AL	18/A-733	12/A-732	15/A-732	001		OPERABLE GLASS PARTITION: RE:SPECS
C231	3'-0"	6'-10"	A	WD	9'-4"	7'-0"	SF-7	AL	15/A-731	12/A-732	15/A-732	203		
C231A	9'-6"	7'-0"	G	AL	9'-7"	7'-0 1/2"	SF-7 OPP.	AL	18/A-733	12/A-732	17/A-732	001		OPERABLE GLASS PARTITION: RE:SPECS
C232	3'-0"	6'-10"	A	WD	9'-4"	7'-0"	SF-7	AL	15/A-731	12/A-732	15/A-732	203		
C232A	9'-6"	7'-0"	G	AL	9'-7"	7'-0 1/2"	SF-7 OPP.	AL	18/A-733	12/A-732	17/A-732	001		OPERABLE GLASS PARTITION: RE:SPECS
C233	3'-0"	6'-10"	A	WD	9'-4"	7'-0"	SF-7	AL	15/A-731	12/A-732	15/A-732	203		
C233A	9'-6"	7'-0"	G	AL	9'-7"	7'-0 1/2"	SF-7	AL	18/A-733	12/A-732	17/A-732	001		OPERABLE GLASS PARTITION: RE:SPECS

DOOR SCHEDULE REMARKS

1. PANIC EXIT HARDWARE
2. NOT AN ENTRY DOOR, EXIT ONLY DOOR WITH LOCKING OPERABLE HARDWARE ON SWING-OUT SIDE OF DOOR
3. NO LOCKING HARDWARE
4. ELEC. DOOR OPENER
5. ELEC. CONTROLLED ACCESS HARDWARE WITH CARD READER
6. ELEC. CONTROLLED ACCESS HARDWARE WITH PUSH-BUTTON
7. ELEC. CONTROLLED ACCESS HARDWARE, ROUGH-IN ONLY
8. KEYED REMOVABLE CENTER MULLION
9. CENTER ASTRAGAL
10. 180 DEGREE SWING
11. CONT. HINGE
12. WEATHER-STRIP SEAL
13. FIRE SMOKE SEAL
14. SOUND SEAL
15. PEEP HOLE
16. DOOR BUZZER
17. DOOR CHIME ON OPEN
18. MANUAL HOLD-OPEN
19. MAGNETIC HOLD-OPEN, CONNECT TO FIRE ALARM
20. MAGNETIC HOLD-OPEN, CONNECT TO SECURITY SYSTEM
21. NSULATED DOOR
22. SOUND RATED DOOR ASSEMBLY, STC AS SPECIFIED
23. WINDSTORM DOOR HARDWARE SHALL BE TESTED AS PART OF A COMPLETE DOOR OPENING ASSEMLBY. THE TESTED DOOR OPENING ASSEMBLY SHALL INCLUDE DOOR HARDWARE. THE ENTIRE DOOR OPENING, INCLUDING DOOR HARDWARE, SHALL BE BY DOOR MANUF.
24. ACOUSTICAL GLASS TO MEET FIRE DOOR ASSEMBLY REQUIREMENTS FOR FIRE RATING INDICATED
25. MANUAL PUSH-UP OPERATION
26. ELEC MOTOR OPERATION WITH KEY SWITCH CONTROL, KEY SWITCH ON ONE SIDE OF DOOR ONLY
27. ELEC MOTOR OPERATION WITH KEY SWITCH CONTROL, KEY SWITCH ON BOTH SIDES OF DOOR
28. ELEC MOTOR OPERATION WITH PUSH-BUTTON CONTROL ON ONE SIDE OF DOOR ONLY
29. PANIC EXIT PUSH-BUTTON ON ONE SIDE OF DOOR ONLY
30. AUTOMATIC OPEN ON FIRE ALARM ACTIVATION
31. AUTOMATIC CLOSE ON FIRE ALARM ACTIVATION
32. FAIL SAFE IN OPEN POSITION
33. FAIL SAFE IN CLOSED POSITION
34. MAXIMUM OCCUPANCY SIGNAGE NEAR DOOR
35. SIGNAGE ON DOOR TO READ "NOT AN EXIT"

GLAZING SCHEDULE - AREA C - SECOND FLOOR

MARK	FRAME WIDTH	HEIGHT	ELEVATION	FRAME MATERIAL	DETAILS SILL	JAMB	HEAD	REMARKS
C215	12'-0"	6'-8"	SF-15 SIM	ALUM	03/7-731	07/A-731	13/A-731	2
C228	81'-6"	15'-0"	CW-10	ALUM	04/A-731	09/A-731	18/A-731	
C229	12'-0"	6'-8"	SF-15 SIM	ALUM	03/7-731	07/A-731	13/A-731	2
C230	12'-0"	6'-8"	SF-15 SIM	ALUM	03/7-731	07/A-731	13/A-731	2
C231	9'-6"	7'-0"	SF-7	ALUM	14/A-732	12/A-732	18/A-732	
C232	9'-6"	7'-0"	SF-7	ALUM	14/A-732	12/A-732	18/A-732	
C233	9'-6"	7'-0"	SF-7	ALUM	14/A-732	12/A-732	18/A-732	

GLAZING SCHEDULE REMARKS

1. PROVIDE MOTORIZED WINDOW SHADES: REFER TO ELECTRICAL DRAWINGS
2. PROVIDE MANUALLY OPERATED WINDOW SHADES
3. REFER TO A-809 FOR FRAME ELEVATION

0"
1"

2ND LEVEL - SCHEDULES - AREA C
A-102C1
FOR BLUEBEAM LABELING/OCR:

File Path: C:_Revit\Local\20380_FISD CLINE ES_ARCH_R21_JJKim.rvt

CHECKED BY: DL
DRAWN BY: Author
Plot Stamp: 1/12/2022 1:49:31 PM

PBK

ARCHITECT PBK Architects, Inc.
HOUSTON PBK.com
11 Greenway Plaza, 22nd Floor
Houston, TX 77046
713-965-0608 P
713-961-4571 F
TX Firm: BR 1608

CIVIL
DIG ENGINEERS
T 713 940 3238
STRUCTURAL
KUBALA ENGINEERS
T 800 248 3874
MEP
LEAF ENGINEERS
T 713 940 3300
FOOD SERVICE
FOODSERVICE DESIGN PROFESSIONALS
T 281 350 2323
BUILDING ENVELOPE
BEAM
T 713 940 3201

CLINE ELEMENTARY SCHOOL CAMPUS REPLACEMENT

1550 WEST BOULEVARD, FRIENDSWOOD, TX 77546

ISSUE FOR CSP

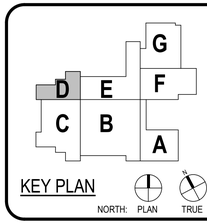

KEY PLAN

NORTH: PLAN TRUE

REGISTERED ARCHITECT MELISSA TURNBAUGH 41779 STATE OF TEXAS

Melissa Turnbaugh

Dec 17, 2021

CLIENT	
FRIENDSWOOD ISD	
DATE DECEMBER 17, 2021	PROJECT NUMBER 20380

DRAWING HISTORY

No.	Description	Date
1	ADDENDUM #1	01/12/2022

ISSUE FOR CSP

BUILDING NUMBER

2ND LEVEL - SCHEDULES - AREA D

A-102D1

ROOM FINISH SCHEDULE

ROOM DATA №	NAME	FLOOR FINISH	BASE FINISH	WALL FINISHES NORTH	EAST	SOUTH	WEST	CEILINGS FINISH	REMARKS
D200	CORRIDOR	CPT-1	RB-1	PT-1	PT-1	PT-1	PT-1	CL-1	
D201	FOURTH GRADE	CPT-1	RB-1	VWC-2	WS-1	VWC-1	VWC-1	CL-1	WS-1 ON EAST WALL FROM FLOOR TO 7'A.F.F.
D202	FOURTH GRADE	CPT-1	RB-1	VWC-1	VWC-1	VWC-2	WS-1	CL-1	WS-1 ON WEST WALL FROM FLOOR TO 7'A.F.F.
D203	STORAGE	SC-1	RB-1	PT-1	PT-1	PT-1	PT-1	CL-1	
D204	RR	EPF-1	EB-1	WT-1	WT-1	WT-1	WT-1	CL-3	REFERENCE RESTROOM ELEVATIONS FOR TILE LOCATIONS TYP.
D205	RR	EPF-1	EB-1	WT-1	WT-1	WT-1	WT-1	CL-3	REFERENCE RESTROOM ELEVATIONS FOR TILE LOCATIONS TYP.
D206	STAIR D	SC-1	RB-1	PT-1	PT-1	PT-1	PT-1	CL-1	
D207	SPEECH THERAPY	CPT-1	RB-1	VWC-1	VWC-1	VWC-1	VWC-1	CL-1	WS-1 ON NORTH WALL FROM FLOOR TO 7'A.F.F.
D208	ESL	CPT-1	RB-1	VWC-1	VWC-1	VWC-1	VWC-1	CL-1	
D209	MATH COACH	CPT-1	RB-1	VWC-1	VWC-1	VWC-1	VWC-1	CL-1	
D210	LITERACY COACH	CPT-1	RB-1	VWC-1	VWC-1	VWC-1	VWC-1	CL-1	
D211	TEACHER WORKROOM	LVT-2	RB-1	PT-1	PT-1	PT-1	PT-1	CL-1	
D212	THIRD GRADE	CPT-1	RB-1	VWC-1	VWC-2	WS-1	VWC-1	CL-1	WS-1 ON SOUTH WALL FROM FLOOR TO 7'A.F.F.
D213	ELEC	SC-1	RB-1	PT-1	PT-1	PT-1	PT-1		
D214	CORRIDOR	CPT-2	RB-1	PT-1	PT-1	PT-1	PT-1	CL-1	
D215	TEACHER RR	EPF-1	EB-1	WT-1	WT-1	WT-1	WT-1	CL-3	REFERENCE RESTROOM ELEVATIONS FOR TILE LOCATIONS TYP.
D216	STORAGE	SC-1	RB-1	PT-1	PT-1	PT-1	PT-1	CL-1	

MATERIAL FINISH SCHEDULE

FLOORS:

LUXURY VINYL TILE	LVT-1	PATCRAFT; LINOCUT; MIRROR; 9"X36" (CLINIC, ISOLATION ROOM, OFFICES, MOTHERS ROOM, ART, LIFE SKILLS, ECSC & COACH OFFICE)
	LVT-2	(INNOVATION LAB, LIBRARY WORKROOM, MAKERSPACE)
	LVT-3	ALTERNATE #3, IN LIEU OF TRZ-1, MOHAWK MATUTO STONE FROST BITE STONE
	LVT-4	ATLERNATE #3, IN LIEU OF TRZ-2, MOHAWK MATUTO STONE SONIC SILVER STONE
	LVT-5	ALTERNATE #3, IN LIEU OF TRZ-3, MOHAWK MATUTO STONE BLUE NIGHT STONE
ATHLETIC FLOORING	AF-1	TARKETT SPORTS; OMNI SPORTS 8.1MM ACTIVE PLACE; CLASSIC OAK (GYM FIELD)
	AF-2	TARKETT SPORTS; OMNI SPORTS 8.1MM ACTIVE PLUS; BLUE MAPLE (GYM BORDER)
CARPET	CPT-1	SHAW CONTRACT; SHIFTING FIELD ENCLAVE TILE; STONE; 18"X36" (CLASSROOM, COLLAB FIELD & ADMIN)
	CPT-2	SHAW CONTRACT; SHIFTING FIELD ENCLAVE TILE: RESERVOIR: 18"X36" (COLLAB & CORRIDOR ACCENT)
	CPT-3	SHAW CONTRACT; CUT AND COMPOSE COPY TILE; SECTOR; 24"X24" (LIBRARY)
	CPT-4	SHAW CONTRACT; ALL ACCESS SWIFT; STEP 14549; 24"X24" (WALK OFF MAT)
SEALED CONCRETE	SC-1	STORAGE
EPOXY	EPF-1	STONHARD; STONSHIELD; ASH (RESTROOMS AND KITCHEN)
TERRAZZO	TRZ-1	TERRAZZO MARBLE & SUPPLY; SAND BED, TM21GG-790; INTEGRAL TERRAZZO BASE(FIELD)
	TRZ-2	TERRAZZO MARBLE & SUPPLY; SAND BED, TM20GG-1237; INTEGRAL TERRAZZO BASE (GRAY ACCENT)
	TRZ-3	TERRAZZO MARBLE & SUPPLY; EPOXY, TM20GG-1239; INTEGRAL TERRAZZO BASE (BLUE ACCENT)
WOOD	WD-1	NYDREEE; PLAINSAWN WHITE OAK; ANTIQUE BARREL; 5 1/4" (LEARNING STAIRS)

BASE:

RUBBER BASE	RB-1	ROPPE; BLACK BROWN; 4" (FIELD)
EPOXY BASE	EB-1	STONHARD; STONSHIELD; ASH; INTEGRAL EPOXY BASE (RESTROOMS AND KITCHEN)
TERRAZZO BASE	TRZ-1	MATCH TERRAZZO FLOOR COLOR, U.N.O.
SCHLUTER EDGE TRIM	SCH-1	PER SPECS

CEILINGS:

CL-1	ACT-1 ROCKFON; EDUCATION PLUS SQUARE; WHITE 42100 (FIELD)	
CL-2	ACT-2 ROCKFON; KOBAL (KITCHEN)	
CL-3	PAINTED GYPSUM; MOISTURE-RESISTANT GYP BD AT ANY WET LOCATIONS	
ROOF DECK	MC-1	EPIC METALS; COLONY MAPLE

CASEWORK:

PLASTIC LAMINATE	PL-1	WILSONART; 7996-36; NATURAL RECON (DOORS, CASEWORK & PSI WALL PANELS)
	PL-2	WILSONART; 4877-38; GREY MESH (COUNTERTOP)
	PL-3	FORMICA; 914-58; MARINE BLUE (WALL PANELS)
SOLID SURFACE	SS-1	CORIAN; CAMEO WHITE (TOP CAP OF LOW WALLS)
QUARTZ	QTZ-1	WILSONART; Q4011; ARASHI (COUNTERTOPS & WINDOW SILLS)

RAILINGS:

INFILL PANEL	R-1	BANKER; M13Z-145; FACTORY POWDER COATED FINISH (INTERIOR AND EXTERIOR GUARDRAIL & STAIR RISER AS NOTED), FINISH COLOR TBD

SPECIALTY PRODUCTS:

TOILET PARTITIONS	TP-1	SCRANTON; CHARCOAL GREY; ORANGE PEEL (TOILET PARTITIONS)
LOCKERS	L-1	LIST INDUSTRIES; 717 GRAND SLAM (KITCHEN LOCKERS)
WALL PADS	SP-1	COLOR TBD
WALL GRAPHIC	SP-5	TBD
MOTORIZED SHADES	MS-1	SHADE FABRIC COLOR TBD

WALLS:

PAINT	PT-1	SHERWIN WILLIAMS; SW7028; INCREDIBLE WHITE (FIELD)
	PT-2	SHERWIN WILLIAMS; SW7064; PASSIVE (ACCENT)
	PT-3	SHERWIN WILLIAMS; SW7650; ELLIE GRAY (ACCENT)
	PT-4	SHERWIN WILLIAMS; SW6991; BLACK MAGIC (DOOR FRAMES, WINDOW FRAMES & EXPOSED CEILING)
	PT-5	SHERWIN WILLIAMS; SW6493; EBBTIDE; LIGHT BLUE(ACCENT)
	PT-6	SHERWIN WILLIAMS; SW6804; DIGNITY BLUE; BLUE (SPIRIT COLOR)
VINYL WALL COVERING	VWC-1	KOROSEAL; DESERT SAND; LIGHT FOG (CLASSROOM FIELD)
	VWC-2	KOROSEAL; DESERT SAND; WASHED DENIM (CLASSROOM & CORRIDOR ACCENT)
	VWC-3	HUFFCOR; VINYL DESIGNER COLLECTION GEM PATTERNL; EGGSHELL 44-701 (BETWEEN CAFETERIA & GYM)
WRITABLE SURFACE	WS-1	KOROSEAL; MAG RITE NATURAL WHITE 59"; NATURAL WHITE (CLASSROOM & COLLABORATION)
TACKWALL	TW-1	TACKWALL; DIGNITY BLUE (CORRIDORS)
	TW-2	TACKWALL; 64227 2001 (COLLAB AREAS)
CORNER GUARD	CG-1	PER SPECS

FABRIC:

ACOUSTICAL WALL PANEL	AWP-1	AUTEX; CUBE; MURALLA; BLUE (GYM & CAFETERIA)
	AWP-2	AUTEX; CUBE; FALLING WATER; LIGHT BLUE (GYM & CAFETERIA)
	AWP-3	AUTEX; CUBE; SAVOYE; LIGHT GRAY (CAFETERIA)
STAGE CURTAINS	STG-1	KM FABRICS; MEMORABLE; 1053 (STAGE CURTAIN)
TACKBOARDS	TW-1	CARNEGIE; XOREL; 6427 751 (TACBOARD FOR CORRIDORS)
	TW-2	CARNEGIE; XOREL; 6427 2001 (TACKBOARD FOR COLLABORATION AREAS)
BAFFLES	AB-1	AUTEX; FRONTIER BAFFLES RAFT BLADE; EMPIRE (GYM CEILING)

TILE:

PORCELAIN TILE	WT-1	TRINITY TILE; ALTA; WHITE; 12"X24" (RESTROOM FIELD)
	WT-2	TRINITY TILE; ALTA; BLUE POLISHED; 12"X24" (RESTROOM ACCENT, CAFETERIA)
	WT-3	TRINITY TILE; ALTA; BLUE MATTE; 12"X24" (RESTROOM ACCENT)
	WT-4	TRINITY TILE; ALTA; BLUE POLISHED; 6"X24" (RESTROOM ACCENT)
	WT-5	TRINITY TILE; ALTA; BLUE MATTE; 6"X24" (RESTROOM ACCENT)
	WT-6	ESMER; BB CONCRETE; MIST; 12"X24" (SERVING LINE BACK WALL)
MOSAIC WALL TILE	MWT-1	MARAZZI; COASTAL EFFECTS; SAPPHIRE; LARGE PICKET MOSAIC 1"X4"; 11 1/4"X11 1/4" SHEET; INSTALL VERTICAL (BREAKROOM & COMMUNITY ROOM BACKSPLASH)
	MWT-2	ESMER; H2O; NAVY; 12"X12" MOSAIC SHEET, INSTALL VERTICAL (SERVING LINE COUNTER)
GROUT	G-1	COLOR TBD
	G-2	COLOR TBD
	G-3	COLOR TBD

**ALL GROUT LINES MUST BE SEALED TO BE NON-ABSORBENT.

EXTERIOR MATERIALS:

BRICK	B-1	NORMAN SIZE BRICK - CRIMSON IRONSPOT SMOOTH
	B-2	NORMAN SIZE BRICK - EBONY IRONSPOT SMOOTH
METAL PANEL	MP-1	BERRIDGE HR-16 PANEL SYSTEM - AGED BRONZE
	MP-2	BERRIDGE HS-12 - AGED BRONZE
LOUVER SCREEN	R-1	RUSKIN EV211 - COLOR TBD
MANUFACTURED STONE	MST-1	ARRISCRAFT 8" x 24" AND 12" x 24"; OAKRIDGE SMOOTH
FIBERGLASS REINFORCED PLASTIC PANEL(FRP)	FRP-1	COLOR TBD (CUSTODIAL WALLS)

GENERAL NOTE

1. ALL FINISH MATERIALS SHALL MEET THE FLAME SPREAD RATINGS PER THE BUILDING CODE.
2. REFER TO INTERIOR ELEVATIONS FOR SPECIFIC MATERIAL LOCATIONS.
3. PAINT ALL EXPOSED STRUCT. MEMBERS, STRUCT. DECK, DUCTWORK, DIFFUSERS, PIPING, CONDUIT, EQUIP. HOUSINGS, LIGHT FIXTURE HOUSINGS, CABLE SUPPORTS, CABLE TRAYS, EQUIP. SUPPORTS, HANGERS, ETC. TO MATCH ADJACENT SURFACES.
4. PAINT ALL NON-FACTORY FINISHED EXPOSED METAL.
5. REFER TO TYPICAL FLOORING TRANSITION DETAILS FOR FLOORING MATERIAL TRANSITIONS.
6. ALL FLOORING TRANSITIONS AT DOORS SHALL BE LOCATED UNDER THE DOOR IN THE CLOSED POSITION, U.N.O.
7. PROTECT ALL FINISHED FLOORING SURFACES FROM DAMAGE DURING ALL CONSTRUCTION PHASES.
8. PROVIDE AND INSTALL BULLNOSE TRIM AT ALL TRANSITIONS FROM CERAMIC WALL TILE TO OTHER MATERIAL U.N.O.
9. REFER TO REFLECTED CEILING PLANS FOR CEILING HEIGHTS.
10. ALL ELECTRICAL DEVICE COVERS ARE TO BE WHITE U.N.O.
11. ALL CARPET PATTERNS TO RUN PARALLEL TO CORRIDOR, U.N.O.
12. PAINT ALL HOLLOW METAL DOOR FRAMES TO MATCH ADJACENT WALL COLOR U.N.O.
13. ALL EXPOSED SPRINKLER PIPING TO BE PAINTED. COLOR TBD

DOOR SCHEDULE - SECOND FLOOR AREA 'D'

MARK	DOOR PANEL SIZE W x H W	H	DOOR ELEVATION	DOOR MATERIAL	DOOR FRAME SIZE W x H W	H	FRAME ELEVATION	FRAME MATERIAL	DETAILS SILL	JAMB	HEAD	H.W.	FIRE RATING LABEL	REMARKS
D200	6'-0"	6'-10"	D	WD	6'-4"	7'-0"	1	AL	18/A-733	04/A-732	15/A-732	700M		
D201	9'-6"	7'-0"	G	AL	9'-7"	7'-0 1/2"	SF-7 OPP.	AL	18/A-733	12/A-732	15/A-732	001		OPERABLE GLASS PARTITION: RE:SPECS
D202	9'-6"	7'-0"	G	AL	9'-7"	7'-0 1/2"	SF-7	AL	18/A-733	12/A-732	15/A-732	001		OPERABLE GLASS PARTITION: RE:SPECS
D203	3'-0"	6'-10"	A	WD	3'-4"	7'-0"	1	AL	18/A-733	04/A-732	09/A-732	203		
D203A	3'-0"	6'-10"	A	WD	3'-4"	7'-0"	1	AL	18/A-733	04/A-732	09/A-732	203		
D206	6'-0"	6'-10"	D	WD	6'-4"	7'-0"	1	AL	18/A-733	04/A-732	09/A-732	738R	1HR	
D207	3'-0"	6'-10"	A	WD	3'-4"	7'-0"	1	AL	18/A-733	04/A-732	09/A-732	103		
D208	3'-0"	6'-10"	A	WD	3'-4"	7'-0"	1	AL	18/A-733	04/A-732	09/A-732	103		
D209	3'-0"	6'-10"	A	WD	3'-4"	7'-0"	1	AL	18/A-733	04/A-732	08/A-732	103		
D210	3'-0"	6'-10"	A	WD	3'-4"	7'-0"	1	AL	18/A-733	04/A-732	09/A-732	103		
D211	3'-0"	6'-10"	A	WD	3'-4"	7'-0"	1	AL	18/A-733	04/A-732	09/A-732	503		
D212	9'-6"	7'-0"	G	AL	9'-7"	7'-0 1/2"	SF-7	AL	18/A-733	12/A-732	15/A-732	001		OPERABLE GLASS PARTITION: RE:SPECS
D213	3'-0"	6'-10"	A	WD	3'-4"	7'-0"	1	AL	18/A-733	04/A-732	09/A-732	201		
D214	6'-0"	6'-10"	D	WD	6'-4"	7'-0"	1	AL	18/A-733	04/A-732	15/A-732	700M		
D215	3'-0"	6'-10"	A	WD	3'-4"	7'-0"	1	AL	18/A-733	04/A-732	09/A-732	241		
D216	3'-0"	6'-10"	A	WD	3'-4"	7'-0"	1	AL	18/A-733	04/A-732	09/A-732	203		
E202B	6'-0"	6'-10"	D	AL	114'-0"	15'-0"	CW-11	AL	10/A-731	06/A-731	15/A-732	W714AI		

DOOR SCHEDULE REMARKS

1. PANIC EXIT HARDWARE
2. NOT AN ENTRY DOOR, EXIT ONLY DOOR WITH LOCKING OPERABLE HARDWARE ON SWING-OUT SIDE OF DOOR
3. NO LOCKING HARDWARE
4. ELEC. DOOR OPENER
5. ELEC. CONTROLLED ACCESS HARDWARE WITH CARD READER
6. ELEC. CONTROLLED ACCESS HARDWARE WITH PUSH-BUTTON
7. ELEC. CONTROLLED ACCESS HARDWARE, ROUGH-IN ONLY
8. KEYED REMOVABLE CENTER MULLION
9. CENTER ASTRAGAL
10. 180 DEGREE SWING
11. CONT. HINGE
12. WEATHER-STRIP SEAL
13. FIRE SMOKE SEAL
14. SOUND SEAL
15. PEEP HOLE
16. DOOR BUZZER
17. DOOR CHIME ON OPEN
18. MANUAL HOLD-OPEN
19. MAGNETIC HOLD-OPEN, CONNECT TO FIRE ALARM
20. MAGNETIC HOLD-OPEN, CONNECT TO SECURITY SYSTEM
21. NSULATED DOOR
22. SOUND RATED DOOR ASSEMBLY, STC AS SPECIFIED
23. WINDSTORM DOOR HARDWARE SHALL BE TESTED AS PART OF A COMPLETE DOOR OPENING ASSEMLBY. THE TESTED DOOR OPENING ASSEMBLY SHALL INCLUDE DOOR HARDWARE. THE ENTIRE DOOR OPENING, INCLUDING DOOR HARDWARE, SHALL BE BY DOOR MANUF.
24. ACOUSTICAL GLASS TO MEET FIRE DOOR ASSEMBLY REQUIREMENTS FOR FIRE RATING INDICATED
25. MANUAL PUSH-UP OPERATION
26. ELEC MOTOR OPERATION WITH KEY SWITCH CONTROL, KEY SWITCH ON ONE SIDE OF DOOR ONLY
27. ELEC MOTOR OPERATION WITH KEY SWITCH CONTROL, KEY SWITCH ON BOTH SIDES OF DOOR
28. ELEC MOTOR OPERATION WITH PUSH-BUTTON CONTROL ON ONE SIDE OF DOOR ONLY
29. PANIC EXIT PUSH-BUTTON ON ONE SIDE OF DOOR ONLY
30. AUTOMATIC OPEN ON FIRE ALARM ACTIVATION
31. AUTOMATIC CLOSE ON FIRE ALARM ACTIVATION
32. FAIL SAFE IN OPEN POSITION
33. FAIL SAFE IN CLOSED POSITION
34. MAXIMUM OCCUPANCY SIGNAGE NEAR DOOR
35. SIGNAGE ON DOOR TO READ "NOT AN EXIT"

GLAZING SCHEDULE - AREA D - SECOND FLOOR

MARK	FRAME WIDTH	HEIGHT	ELEVATION	FRAME MATERIAL	DETAILS SILL	JAMB	HEAD	REMARKS
D201	12'-0"	6'-8"	SF-15 SIM	ALUM	03/7-731	08/A-731	13/A-731	2
D202	12'-0"	6'-8"	SF-15 SIM	ALUM	03/7-731	08/A-731	13/A-731	2
D212B	12'-0"	6'-8"	SF-15 SIM	ALUM	03/7-731	08/A-731	13/A-731	2

GLAZING SCHEDULE REMARKS

1. PROVIDE MOTORIZED WINDOW SHADES: REFER TO ELECTRICAL DRAWINGS
2. PROVIDE MANUALLY OPERATED WINDOW SHADES
3. REFER TO A-809 FOR FRAME ELEVATION

0" 1"

2ND LEVEL - SCHEDULES - AREA D

A-102D1

FOR BLUEBEAM LABELING/OCR:

File Path: C:_Revit\Local\20380_FISD CLINE ES_ARCH_R21_JIKim.rvt

CHECKED BY: DL

DRAWN BY: Author

Plot Stamp: 1/12/2022 1:50:02 PM

ROOM FINISH SCHEDULE

ROOM DATA №	ROOM DATA NAME	FLOOR FINISH	BASE FINISH	WALL FINISHES NORTH	WALL FINISHES EAST	WALL FINISHES SOUTH	WALL FINISHES WEST	CEILINGS FINISH	REMARKS
E200	CORRIDOR	CPT-1	RB-1	PT-1	PT-1	PT-1	PT-1	MC-1	
E201	CORRIDOR	CPT-2	RB-1	PT-1	PT-1	PT-1	PT-1	CL-1	
E202	COLLABORATION	CPT-1	RB-1	-	PT-1	PT-1	PT-1	MC-1	REFER TO FINISH PLAN FOR FLOORING PATTERNS.
E202A	BALCONY	-	-	-	-	-	-	MC-1	
E203	LEARNING STUDIO	CPT-1	RB-1	WS-1	VWC-1	VWC-1	VWC-2	CL-1	WS-1 ON NORTH WALL FROM FLOOR TO 7'A.F.F.
E204	THIRD GRADE	CPT-1	RB-1	WS-1	VWC-1	VWC-1	VWC-2	CL-1	WS-1 ON NORTH WALL FROM FLOOR TO 7'A.F.F.
E205	THIRD GRADE	CPT-1	RB-1	VWC-1	VWC-1	WS-1	VWC-2	CL-1	WS-1 ON SOUTH WALL FROM FLOOR TO 7'A.F.F.
E206	THIRD GRADE	CPT-1	RB-1	VWC-2	WS-1	VWC-1	VWC-1	CL-1	WS-1 ON EAST WALL FROM FLOOR TO 7'A.F.F.
E207	THIRD GRADE	CPT-1	RB-1	VWC-2	VWC-1	VWC-1	WS-1	CL-1	WS-1 ON WEST WALL FROM FLOOR TO 7'A.F.F.
E208	THIRD GRADE	CPT-1	RB-1	VWC-2	WS-1	VWC-1	VWC-1	CL-1	WS-1 ON EAST WALL FROM FLOOR TO 7'A.F.F.
E209	THIRD GRADE	CPT-1	RB-1	VWC-2	VWC-1	VWC-1	WS-1	CL-1	WS-1 ON WEST WALL FROM FLOOR TO 7'A.F.F.

MATERIAL FINISH SCHEDULE

FLOORS:

LUXURY VINYL TILE	LVT-1	PATCRAFT; LINOCUT; MIRROR; 9"X36" (CLINIC, ISOLATION ROOM, OFFICES, MOTHERS ROOM, ART, LIFE SKILLS, ECSC & COACH OFFICE)
	LVT-2	(INNOVATION LAB, LIBRARY WORKROOM, MAKERSPACE)
	LVT-3	ALTERNATE #3, IN LIEU OF TRZ-1, MOHAWK MATUTO STONE FROST BITE STONE
	LVT-4	ATLERNATE #3, IN LIEU OF TRZ-2, MOHAWK MATUTO STONE SONIC SILVER STONE
	LVT-5	ALTERNATE #3, IN LIEU OF TRZ-3, MOHAWK MATUTO STONE BLUE NIGHT STONE
ATHLETIC FLOORING	AF-1	TARKETT SPORTS; OMNI SPORTS 8.1MM ACTIVE PLACE; CLASSIC OAK (GYM FIELD)
	AF-2	TARKETT SPORTS; OMNI SPORTS 8.1MM ACTIVE PLUS; BLUE MAPLE (GYM BORDER)
CARPET	CPT-1	SHAW CONTRACT; SHIFTING FIELD ENCLAVE TILE; STONE; 18"X36" (CLASSROOM, COLLAB FIELD & ADMIN)
	CPT-2	SHAW CONTRACT; SHIFTING FIELD ENCLAVE TILE: RESERVOIR: 18"X36" (COLLAB & CORRIDOR ACCENT)
	CPT-3	SHAW CONTRACT; CUT AND COMPOSE COPY TILE; SECTOR; 24"X24" (LIBRARY)
	CPT-4	SHAW CONTRACT; ALL ACCESS SWIFT; STEP 14549; 24"X24" (WALK OFF MAT)
SEALED CONCRETE	SC-1	STORAGE
EPOXY	EPF-1	STONHARD; STONSHIELD; ASH (RESTROOMS AND KITCHEN)
TERRAZZO	TRZ-1	TERRAZZO MARBLE & SUPPLY; SAND BED, TM21GG-790; INTEGRAL TERRAZZO BASE(FIELD)
	TRZ-2	TERRAZZO MARBLE & SUPPLY; SAND BED, TM20GG-1237; INTEGRAL TERRAZZO BASE (GRAY ACCENT)
	TRZ-3	TERRAZZO MARBLE & SUPPLY; EPOXY, TM20GG-1239; INTEGRAL TERRAZZO BASE (BLUE ACCENT)
WOOD	WD-1	NYDREEE; PLAINSAWN WHITE OAK; ANTIQUE BARREL; 5 1/4" (LEARNING STAIRS)

BASE:

RUBBER BASE	RB-1	ROPPE; BLACK BROWN; 4" (FIELD)
EPOXY BASE	EB-1	STONHARD; STONSHIELD; ASH; INTEGRAL EPOXY BASE (RESTROOMS AND KITCHEN)
TERRAZZO BASE	TRZ-1	MATCH TERRAZZO FLOOR COLOR, U.N.O.
SCHLUTER EDGE TRIM	SCH-1	PER SPECS

CEILINGS:

CL-1	ACT-1 ROCKFON; EDUCATION PLUS SQUARE; WHITE 42100 (FIELD)	
CL-2	ACT-2 ROCKFON; KOBAL (KITCHEN)	
CL-3	PAINTED GYPSUM; MOISTURE-RESISTANT GYP BD AT ANY WET LOCATIONS.	
ROOF DECK	MC-1	EPIC METALS; COLONY MAPLE

CASEWORK:

PLASTIC LAMINATE	PL-1	WILSONART; 7996-36; NATURAL RECON (DOORS, CASEWORK & PSI WALL PANELS)
	PL-2	WILSONART; 4877-38; GREY MESH (COUNTERTOP)
	PL-3	FORMICA; 914-58; MARINE BLUE (WALL PANELS)
SOLID SURFACE	SS-1	CORIAN; CAMEO WHITE (TOP CAP OF LOW WALLS)
QUARTZ	QTZ-1	WILSONART; Q4011; ARASHI (COUNTERTOPS & WINDOW SILLS)

RAILINGS:

INFILL PANEL	R-1	BANKER; M13Z-145; FACTORY POWDER COATED FINISH (INTERIOR AND EXTERIOR GUARDRAIL & STAIR RISER AS NOTED), FINISH COLOR TBD

SPECIALTY PRODUCTS:

TOILET PARTITIONS	TP-1	SCRANTON; CHARCOAL GREY; ORANGE PEEL (TOILET PARTITIONS)
LOCKERS	L-1	LIST INDUSTRIES; 717 GRAND SLAM (KITCHEN LOCKERS)
WALL PADS	SP-1	COLOR TBD
WALL GRAPHIC	SP-5	TBD
MOTORIZED SHADES	MS-1	SHADE FABRIC COLOR TBD

WALLS:

PAINT	PT-1	SHERWIN WILLIAMS; SW7028; INCREDIBLE WHITE (FIELD)
	PT-2	SHERWIN WILLIAMS; SW7064; PASSIVE (ACCENT)
	PT-3	SHERWIN WILLIAMS; SW7650; ELLIE GRAY (ACCENT)
	PT-4	SHERWIN WILLIAMS; SW6991; BLACK MAGIC (DOOR FRAMES, WINDOW FRAMES & EXPOSED CEILING)
	PT-5	SHERWIN WILLIAMS; SW6493; EBBTIDE; LIGHT BLUE(ACCENT)
	PT-6	SHERWIN WILLIAMS; SW6804; DIGNITY BLUE; BLUE (SPIRIT COLOR)
VINYL WALL COVERING	VWC-1	KOROSEAL; DESERT SAND; LIGHT FOG (CLASSROOM FIELD)
	VWC-2	KOROSEAL; DESERT SAND; WASHED DENIM (CLASSROOM & CORRIDOR ACCENT)
	VWC-3	HUFFCOR; VINYL DESIGNER COLLECTION GEM PATTERNL; EGGSHELL 44-701 (BETWEEN CAFETERIA & GYM)
WRITABLE SURFACE	WS-1	KOROSEAL; MAG RITE NATURAL WHITE 59"; NATURAL WHITE (CLASSROOM & COLLABORATION)
TACKWALL	TW-1	TACKWALL; DIGNITY BLUE (CORRIDORS)
	TW-2	TACKWALL; 64227 2001 (COLLAB AREAS)
CORNER GUARD	CG-1	PER SPECS

FABRIC:

ACOUSTICAL WALL PANEL	AWP-1	AUTEX; CUBE; MURALLA; BLUE (GYM & CAFETERIA)
	AWP-2	AUTEX; CUBE; FALLING WATER; LIGHT BLUE (GYM & CAFETERIA)
	AWP-3	AUTEX; CUBE; SAVOYE; LIGHT GRAY (CAFETERIA)
STAGE CURTAINS	STG-1	KM FABRICS; MEMORABLE; 1053 (STAGE CURTAIN)
TACKBOARDS	TW-1	CARNEGIE; XOREL; 6427 751 (TACBOARD FOR CORRIDORS)
	TW-2	CARNEGIE; XOREL; 6427 2001 (TACKBOARD FOR COLLABORATION AREAS)
BAFFLES	AB-1	AUTEX; FRONTIER BAFFLES RAFT BLADE; EMPIRE (GYM CEILING)

TILE:

PORCELAIN TILE	WT-1	TRINITY TILE; ALTA; WHITE; 12"X24" (RESTROOM FIELD)
	WT-2	TRINITY TILE; ALTA; BLUE POLISHED; 12"X24" (RESTROOM ACCENT, CAFETERIA)
	WT-3	TRINITY TILE; ALTA; BLUE MATTE; 12"X24" (RESTROOM ACCENT)
	WT-4	TRINITY TILE; ALTA; BLUE POLISHED; 6"X24" (RESTROOM ACCENT)
	WT-5	TRINITY TILE; ALTA; BLUE MATTE; 6"X24" (RESTROOM ACCENT)
	WT-6	ESMER; BB CONCRETE; MIST; 12"X24" (SERVING LINE BACK WALL)
MOSAIC WALL TILE	MWT-1	MARAZZI; COASTAL EFFECTS; SAPPHIRE; LARGE PICKET MOSAIC 1"X4"; 11 1/4"X11 1/4" SHEET; INSTALL VERTICAL (BREAKROOM & COMMUNITY ROOM BACKSPLASH)
	MWT-2	ESMER; H2O; NAVY; 12"X12" MOSAIC SHEET, INSTALL VERTICAL (SERVING LINE COUNTER)
GROUT	G-1	COLOR TBD
	G-2	COLOR TBD
	G-3	COLOR TBD

**ALL GROUT LINES MUST BE SEALED TO BE NON-ABSORBENT.

EXTERIOR MATERIALS:

BRICK	B-1	NORMAN SIZE BRICK - CRIMSON IRONSPOT SMOOTH
	B-2	NORMAN SIZE BRICK - EBONY IRONSPOT SMOOTH
METAL PANEL	MP-1	BERRIDGE HR-16 PANEL SYSTEM - AGED BRONZE
	MP-2	BERRIDGE HS-12 - AGED BRONZE
LOUVER SCREEN	R-1	RUSKIN EV211 - COLOR TBD
MANUFACTURED STONE	MST-1	ARRISCRAFT 8" x 24" AND 12" x 24"; OAKRIDGE SMOOTH
FIBERGLASS REINFORCED PLASTIC PANEL(FRP)	FRP-1	COLOR TBD (CUSTODIAL WALLS)

GENERAL NOTE

1. ALL FINISH MATERIALS SHALL MEET THE FLAME SPREAD RATINGS PER THE BUILDING CODE.
2. REFER TO INTERIOR ELEVATIONS FOR SPECIFIC MATERIAL LOCATIONS.
3. PAINT ALL EXPOSED STRUCT. MEMBERS, STRUCT. DECK, DUCTWORK, DIFFUSERS, PIPING, CONDUIT, EQUIP. HOUSINGS, LIGHT FIXTURE HOUSINGS, CABLE SUPPORTS, CABLE TRAYS, EQUIP. SUPPORTS, HANGERS, ETC. TO MATCH ADJACENT SURFACES.
4. PAINT ALL NON-FACTORY FINISHED EXPOSED METAL.
5. REFER TO TYPICAL FLOORING TRANSITION DETAILS FOR FLOORING MATERIAL TRANSITIONS.
6. ALL FLOORING TRANSITIONS AT DOORS SHALL BE LOCATED UNDER THE DOOR IN THE CLOSED POSITION, U.N.O.
7. PROTECT ALL FINISHED FLOORING SURFACES FROM DAMAGE DURING ALL CONSTRUCTION PHASES.
8. PROVIDE AND INSTALL BULLNOSE TRIM AT ALL TRANSITIONS FROM CERAMIC WALL TILE TO OTHER MATERIAL U.N.O.
9. REFER TO REFLECTED CEILING PLANS FOR CEILING HEIGHTS.
10. ALL ELECTRICAL DEVICE COVERS ARE TO BE WHITE U.N.O.
11. ALL CARPET PATTERNS TO RUN PARALLEL TO CORRIDOR, U.N.O.
12. PAINT ALL HOLLOW METAL DOOR FRAMES TO MATCH ADJACENT WALL COLOR U.N.O.
13. ALL EXPOSED SPRINKLER PIPING TO BE PAINTED. COLOR TBD

DOOR SCHEDULE - SECOND FLOOR AREA 'E'

MARK	DOOR PANEL SIZE W	DOOR PANEL SIZE H	DOOR ELEVATION	DOOR MATERIAL	DOOR FRAME SIZE W	DOOR FRAME SIZE H	DOOR FRAME ELEVATION	FRAME MATERIAL	DETAILS SILL	DETAILS JAMB	DETAILS HEAD	H.W.	FIRE RATING LABEL	REMARKS
E201A	6'-0"	6'-10"	D	WD	6'-4"	7'-0"	1	AL	18/A-733	04/A-732	15/A-732	700M		
E202A	6'-0"	6'-10"	D	AL	114'-0"	15'-0"	CW-11	AL	10/A-731	06/A-731	15/A-732	W714AI		
E203	3'-0"	6'-10"	E	WD	3'-4"	7'-0"	1	AL	18/A-733	04/A-732	09/A-732	203S		
E204	9'-6"	7'-0"	G	AL	9'-7"	7'-0 1/2"	SF-7	AL	18/A-733	12/A-732	15/A-732	001		OPERABLE GLASS PARTITION: RE:SPECS
E205	3'-0"	6'-10"	A	WD	9'-4"	7'-0"	SF-7	AL	15/A-731	12/A-732	15/A-732	203		
E206	3'-0"	6'-10"	A	WD	9'-4"	7'-0"	SF-7	AL	15/A-731	12/A-732	15/A-732	203		
E206A	9'-6"	7'-0"	G	AL	9'-7"	7'-0 1/2"	SF-7	AL	18/A-733	12/A-732	17/A-732	001		OPERABLE GLASS PARTITION: RE:SPECS
E207	3'-0"	6'-10"	A	WD	9'-4"	7'-0"	SF-7	AL	15/A-731	12/A-732	15/A-732	203		
E207A	9'-6"	7'-0"	G	AL	9'-7"	7'-0 1/2"	SF-7 OPP.	AL	18/A-733	12/A-732	17/A-732	001		OPERABLE GLASS PARTITION: RE:SPECS
E208	3'-0"	6'-10"	A	WD	9'-4"	7'-0"	SF-7	AL	15/A-731	12/A-732	15/A-732	203		
E208A	9'-6"	7'-0"	G	AL	9'-7"	7'-0 1/2"	SF-7	AL	18/A-733	12/A-732	17/A-732	001		OPERABLE GLASS PARTITION: RE:SPECS
E209	3'-0"	6'-10"	A	WD	9'-4"	7'-0"	SF-7	AL	15/A-731	12/A-732	15/A-732	203		
E209A	9'-6"	7'-0"	G	AL	9'-7"	7'-0 1/2"	SF-7 OPP.	AL	18/A-733	12/A-732	17/A-732	001		OPERABLE GLASS PARTITION: RE:SPECS

DOOR SCHEDULE REMARKS

1. PANIC EXIT HARDWARE
2. NOT AN ENTRY DOOR, EXIT ONLY DOOR WITH LOCKING OPERABLE HARDWARE ON SWING-OUT SIDE OF DOOR
3. NO LOCKING HARDWARE
4. ELEC. DOOR OPENER
5. ELEC. CONTROLLED ACCESS HARDWARE WITH CARD READER
6. ELEC. CONTROLLED ACCESS HARDWARE WITH PUSH-BUTTON
7. ELEC. CONTROLLED ACCESS HARDWARE, ROUGH-IN ONLY
8. KEYED REMOVABLE CENTER MULLION
9. CENTER ASTRAGAL
10. 180 DEGREE SWING
11. CONT. HINGE
12. WEATHER-STRIP SEAL
13. FIRE SMOKE SEAL
14. SOUND SEAL
15. PEEP HOLE
16. DOOR BUZZER
17. DOOR CHIME ON OPEN
18. MANUAL HOLD-OPEN
19. MAGNETIC HOLD-OPEN, CONNECT TO FIRE ALARM
20. MAGNETIC HOLD-OPEN, CONNECT TO SECURITY SYSTEM
21. NSULATED DOOR
22. SOUND RATED DOOR ASSEMBLY, STC AS SPECIFIED
23. WINDSTORM DOOR HARDWARE SHALL BE TESTED AS PART OF A COMPLETE DOOR OPENING ASSEMLBY. THE TESTED DOOR OPENING ASSEMBLY SHALL INCLUDE DOOR HARDWARE. THE ENTIRE DOOR OPENING, INCLUDING DOOR HARDWARE, SHALL BE BY DOOR MANUF.
24. ACOUSTICAL GLASS TO MEET FIRE DOOR ASSEMBLY REQUIREMENTS FOR FIRE RATING INDICATED
25. MANUAL PUSH-UP OPERATION
26. ELEC MOTOR OPERATION WITH KEY SWITCH CONTROL, KEY SWITCH ON ONE SIDE OF DOOR ONLY
27. ELEC MOTOR OPERATION WITH KEY SWITCH CONTROL, KEY SWITCH ON BOTH SIDES OF DOOR
28. ELEC MOTOR OPERATION WITH PUSH-BUTTON CONTROL ON ONE SIDE OF DOOR ONLY
29. PANIC EXIT PUSH-BUTTON ON ONE SIDE OF DOOR ONLY
30. AUTOMATIC OPEN ON FIRE ALARM ACTIVATION
31. AUTOMATIC CLOSE ON FIRE ALARM ACTIVATION
32. FAIL SAFE IN OPEN POSITION
33. FAIL SAFE IN CLOSED POSITION
34. MAXIMUM OCCUPANCY SIGNAGE NEAR DOOR
35. SIGNAGE ON DOOR TO READ "NOT AN EXIT"

GLAZING SCHEDULE - AREA E - SECOND FLOOR

MARK	FRAME WIDTH	FRAME HEIGHT	ELEVATION	FRAME MATERIAL	DETAILS SILL	DETAILS JAMB	DETAILS HEAD	REMARKS
E202	114'-0"	15'-0"	CW-11	ALUM	03/A-731	09/A-731	18/A-731	
E205	5'-4"	7'-0"	SF-11	ALUM	14/A-732	12/A-732	17/A-732	
E205B	12'-0"	4'-0"	SF-15 SIM	ALUM	01/A-731	10/A-731	13/A-731	2
E206	10'-0"	7'-0"	SF-7	ALUM	14/A-732	12/A-732	18/A-732	
E207	9'-6"	7'-0"	SF-7	ALUM	14/A-732	12/A-732	18/A-732	
E208	9'-6"	7'-0"	SF-7	ALUM	14/A-732	12/A-732	18/A-732	
E209	9'-6"	7'-0"	SF-7	ALUM	14/A-732	12/A-732	18/A-732	

GLAZING SCHEDULE REMARKS

1. PROVIDE MOTORIZED WINDOW SHADES: REFER TO ELECTRICAL DRAWINGS
2. PROVIDE MANUALLY OPERATED WINDOW SHADES
3. REFER TO A-809 FOR FRAME ELEVATION

PBK

ARCHITECT PBK Architects, Inc.
HOUSTON PBK.com
11 Greenway Plaza, 22nd Floor
Houston, TX 77046
713-965-0608 P
713-961-4571 F
TX Firm: BR 1608

CIVIL
DIG ENGINEERS
T 713 940 3238
STRUCTURAL
KUBALA ENGINEERS
T 800 248 3874
MEP
LEAF ENGINEERS
T 713 940 3300
FOOD SERVICE
FOODSERVICE DESIGN PROFESSIONALS
T 281 350 2323
BUILDING ENVELOPE
BEAM
T 713 940 3201

CLINE ELEMENTARY SCHOOL
CAMPUS REPLACEMENT

1550 WEST BOULEVARD, FRIENDSWOOD, TX 77546

ISSUE FOR CSP

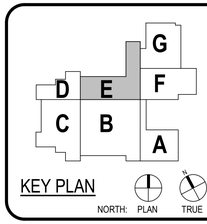

KEY PLAN

NORTH: PLAN TRUE

REGISTERED ARCHITECT MELISSA TURNBAUGH #17779 STATE OF TEXAS

Melissa Turnbaugh

Dec 17, 2021

CLIENT
FRIENDSWOOD ISD

DATE	PROJECT NUMBER
DECEMBER 17, 2021	20380

DRAWING HISTORY

No.	Description	Date
1	ADDENDUM #1	01/12/2022

ISSUE FOR CSP

BUILDING NUMBER

2ND LEVEL - SCHEDULES - AREA E

A-102E1

2ND LEVEL - SCHEDULES - AREA E
A-102E1
FOR BLUEBEAM LABELING/OCR:
0"
1"

File Path: C:_Revit\Local\20380_FISD CLINE ES_ARCH_R21_JIKim.rvt

CHECKED BY: DL
DRAWN BY: Author
Plot Stamp: 1/12/2022 1:50:38 PM

2ND LEVEL - CEILING PLAN - AREA B

A-202B

FOR BLUEBEAM LABELING/OCR:

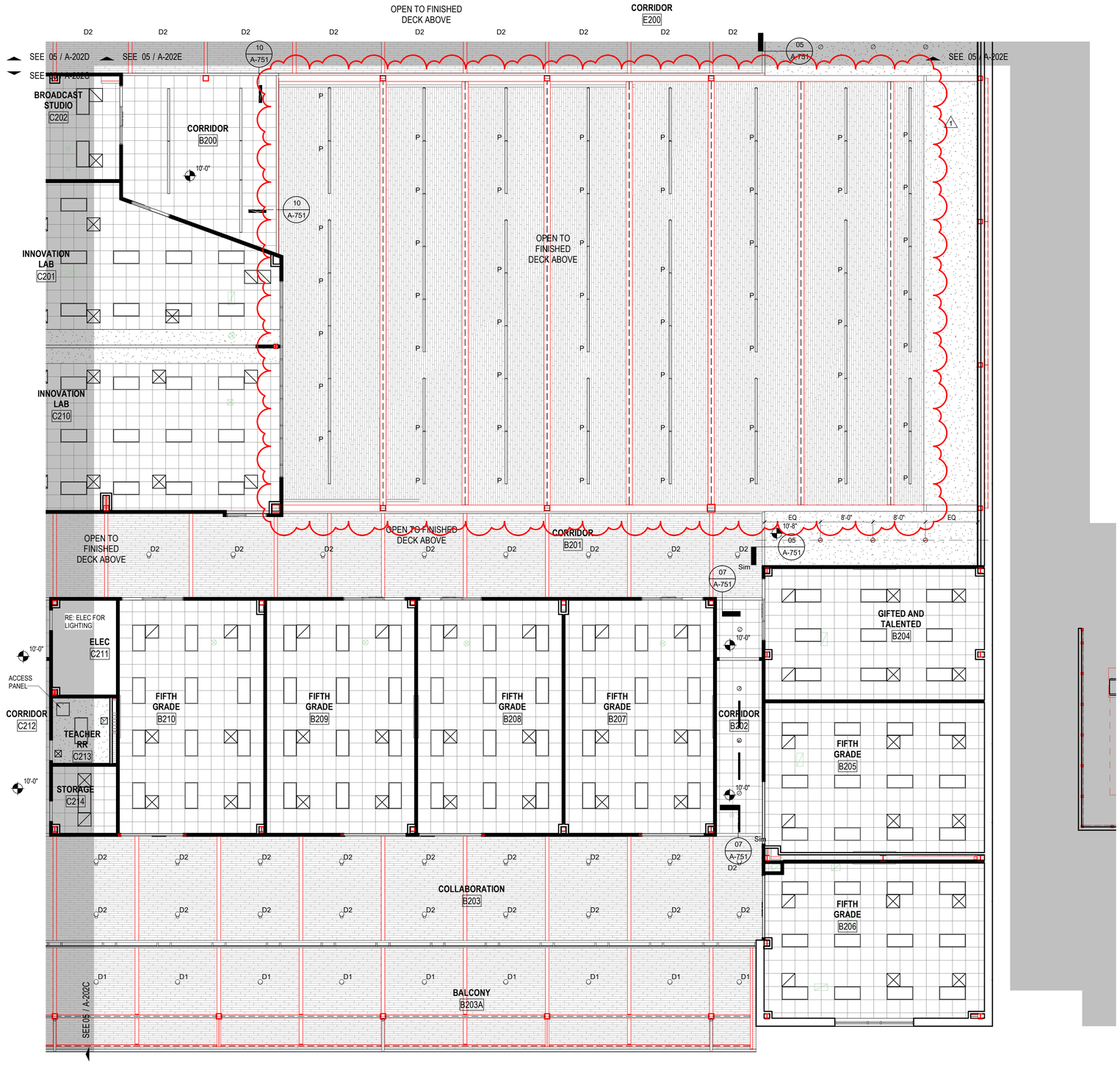

05 2ND LEVEL - CEILING PLAN - AREA B
1/8" = 1'-0"

GENERAL CEILING PLAN NOTES

1. REFER TO AND COORD. WITH ROOM FINISH SCHEDULES FOR SPECIFIC CEILING TYPES.
2. ALL SCHEDULED CEILING HEIGHTS ARE FROM THE MAIN FLOOR LEVEL WITHIN THE ROOM AND OR SPACE, AND ARE NOT FROM AN ELEVATED FLOOR LEVEL, AND ARE NOT FROM A RECESSED FLOOR LEVEL.
3. NO FIRE SPRINKLER HEADS ARE SHOWN ON ARCH. CEILING PLANS. ALL SPRINKLER HEADS SHALL BE CENTERED WITHIN CEILING TILES U.N.O.
4. ONLY CEILING MOUNTED FIXTURES AND EQUIP. IS SHOWN ON ARCH. CEILING PLANS. REFER TO INTERIOR ELEVATIONS FOR WALL MOUNTED FIXTURES. REFER TO MEPT DOCUMENTS FOR ADDITIONAL INFORMATION CONCERNING CEILING MOUNTED FIXTURES AND OR WALL MOUNTED FIXTURES.
5. CEILING MOUNTED LIGHT FIXTURES ARE SHOWN FOR LOCATION PURPOSES ONLY. COORD. WITH ELEC. DOCUMENTS FOR LIGHT FIXTURE DESIGNATIONS.
6. CEILING MOUNTED LIGHT FIXTURES WITHIN FIRE RATED CEILING ASSEMBLIES SHALL HAVE LIGHT FIXTURE PROTECTION AND BE TENTED OR OTHERWISE FIRE RATED TO MATCH CEILING ASSEMBLY FIRE RATING.
7. VERIFY LOCATIONS OF ALL CEILING ACCESS PANELS WITH MEPT DOCUMENTS. COORD. LOCATIONS OF CEILING ACCESS PANELS WITH ARCH. PRIOR TO INSTALLATION. CEILING ACCESS PANEL FIRE RATINGS SHALL MATCH CEILING ASSEMBLY FIRE RATINGS.
8. REFER TO WALL SECTIONS FOR WALL-CEILING INTERFACE
9. ELECTRICAL AND LOW VOLTAGE CONDUIT TO RUN INSIDE DECK AT EXPOSED CEILINGS - MC-1 (ACOUSTICAL DECK)
10. EXCEPT MC-1 DECK AREA, ALL OTHER EXPOSED DECK, STRUCTURE, MEP DEVICE WILL BE PAINTED BLACK, TYP
11. CEILING HEIGHT TO BE AT 10'-0" A.F.F. U.N.O.
12. ALL 2'X2' ACOUSTICAL CEILING PANEL TO BE CL-1 U.N.O.

CEILING MATERIALS LEGEND

- CL-1, 2' x 2' ACOUSTICAL CEILING PANEL *RE: FINISH SCHEDULE*
- CL-2, 2'X2' ACOUSTICAL CEILING PANEL *RE: FINISH SCHEDULE*
- CL-3, GWB - GYPSUM BOARD *RE: FINISH SCHEDULE*
- MC-1, EXPOSED ROOF DECK *RE: FINISH SCHEDULE*
- SPM - METAL SOFFIT PANEL SYSTEM *RE: FINISH SCHEDULE*
- 2' x 4' TROFFER LIGHT
- RECESSED LIGHT FIXTURE, UNO
- P — 96" LINEAR PENDANT FIXTURE
- RECESSED CYLINDER LIGHT FIXTURE, UNO
- D1 — SURFACE MOUNTED CYLINDER LIGHT FIXTURE
- D2 — PENDANT CYLINDER LIGHT FIXTURE

PBK

ARCHITECT PBK Architects, Inc.
HOUSTON PBK.com
11 Greenway Plaza, 22nd Floor
Houston, TX 77046
713-965-0608 P
713-961-4571 F
TX Firm: BR 1608

CIVIL
DIG ENGINEERS
T 713 940 3238
STRUCTURAL
KUBALA ENGINEERS
T 800 248 3674
MEPT
LEAF ENGINEERS
T 713 940 3300
FOOD SERVICE
FOODSERVICE DESIGN PROFESSIONALS
T 281 392 2323
BUILDING ENVELOPE
BEAM
T 713 940 3201

CLINE ELEMENTARY SCHOOL CAMPUS REPLACEMENT

1550 WEST BOULEVARD, FRIENDSWOOD, TX 77546

ISSUE FOR CSP

FRIENDSWOOD INDEPENDENT SCHOOL DISTRICT

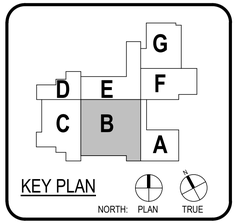

REGISTERED ARCHITECT MELISSA TURNBAUGH 21778 STATE OF TEXAS

Melissa Turnbaugh

Dec 17 2021

CLIENT
FRIENDSWOOD ISD

DATE	PROJECT NUMBER
DECEMBER 17, 2021	20380

DRAWING HISTORY

No.	Description	Date
1	ADDENDUM #1	01/12/2022

ISSUE FOR CSP

2ND LEVEL - CEILING PLAN - AREA B

A-202B

File Path: C:_Revit\Local\20380_FISD CLINE ES_ARCH_R21_JIKim.rvt

CHECKED BY:
Checker
DRAWN BY:
Author
Plot Stamp:
1/12/2022 9:47:36 AM

ENLARGED TOILET PLANS

A-412

FOR BLUEBEAM LABELING/OCR:

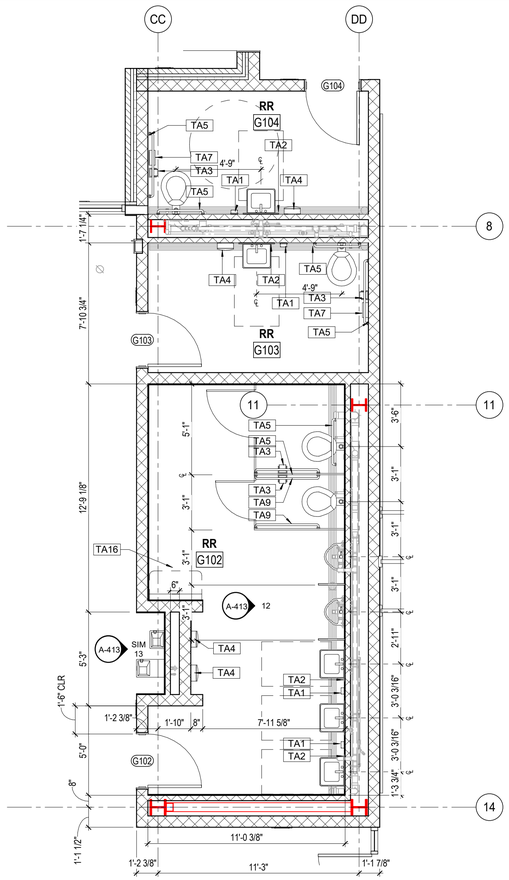

15 GYM/CAFETERIA RESTROOM - G102, G103, G104
1/4" = 1'-0"

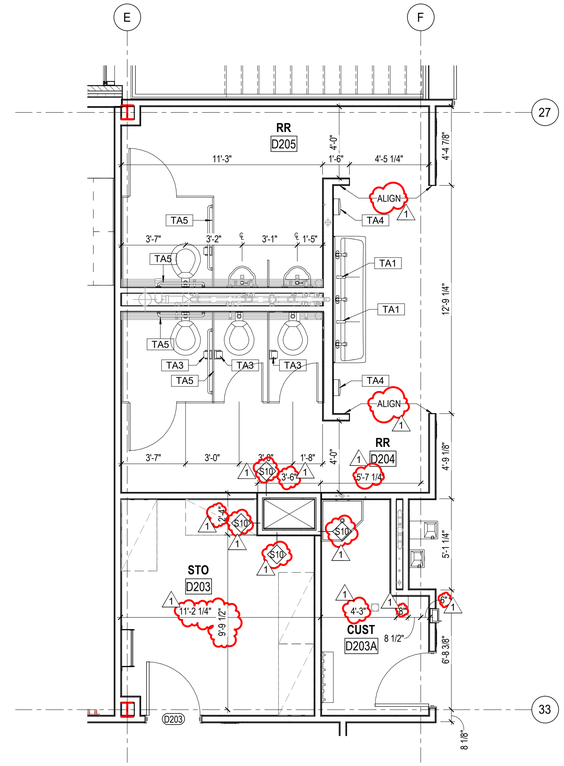

13 STUDENT RESTROOM - D204, D205
1/4" = 1'-0"

KEYNOTE LEGEND

NUMBER	DESCRIPTION
71	TRACKS FOR CEILING LIFT SYSTEM AND SLING. RE:SPECS. PROVIDE STRUCTRUAL SUPPORT FOR CEILING TRACK
TA1	SOAP DISPENSER, O.F.C.I.
TA2	MIRROR [24"X36"]
TA3	TOILET PAPER DISPENSER, O.F.C.I.
TA4	PAPER TOWEL DISPENSER, O.F.C.I.
TA5	GRAB BARS (AT TYPICAL ACCESSIBLE TOILET STALLS)
TA7	SANITARY NAPKIN DISPOSAL
TA9	GRAB BARS (AT ACCESSIBLE SHOWER)
TA12	SHOWER CURTAINS, RODS AND HOOKS
TA16	DIAPER CHANGING STATIONS

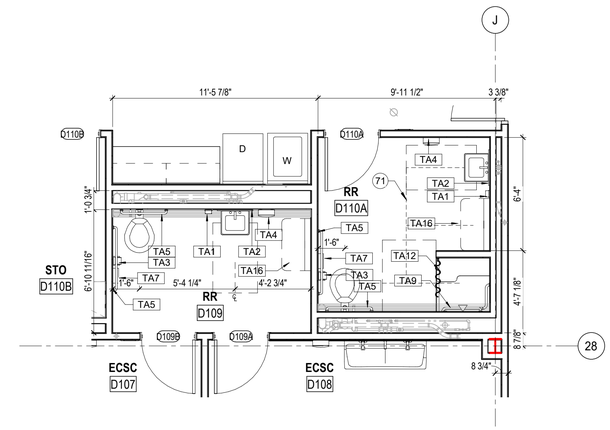

11 ECSC RESTROOM - D109, D110A
1/4" = 1'-0"

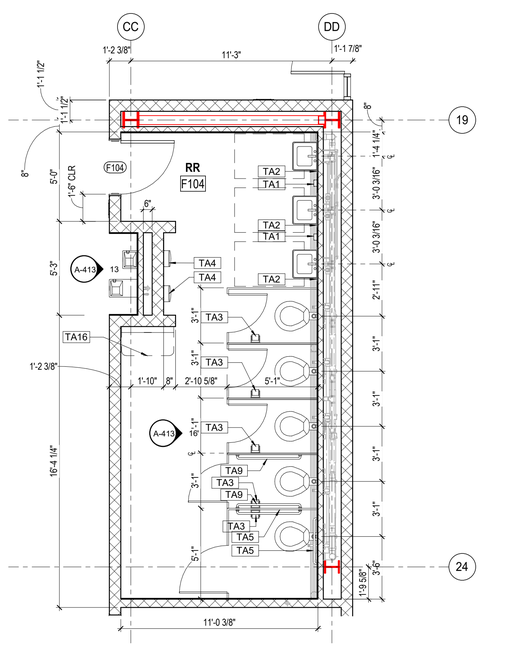

05 GYM/CAFETERIA RESTROOM - F104
1/4" = 1'-0"

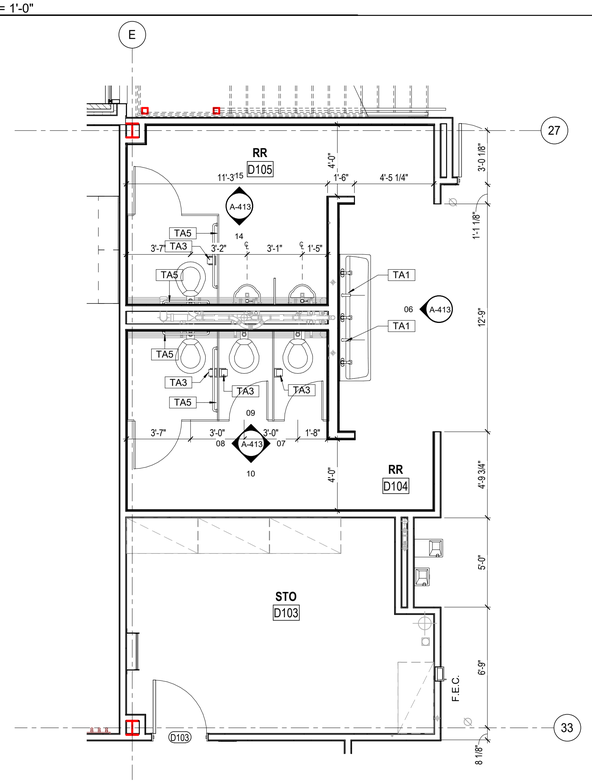

03 STUDENT RESTROOM - D104, D105
1/4" = 1'-0"

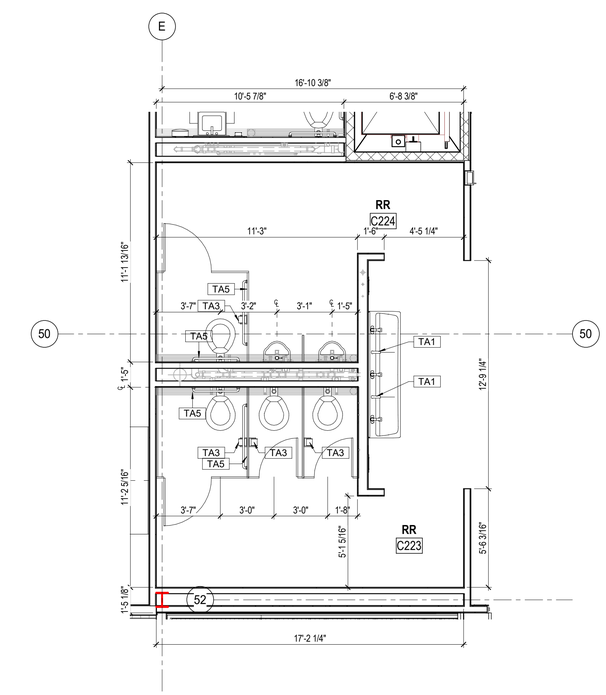

01 STUDENT RESTROOM - C223, C224
1/4" = 1'-0"

PBK

ARCHITECT PBK Architects, Inc.
HOUSTON PBK.com
11 Greenway Plaza, 22nd Floor
Houston, TX 77046
713-965-0608 P
713-961-4571 F
TX Firm: BR 1608

CIVIL
DIG ENGINEERS
T 713 940 3238
STRUCTURAL
KUBALA ENGINEERS
T 800 248 3674
MEP/T
LEAF ENGINEERS
T 713 940 3300
FOOD SERVICE
FOODSERVICE DESIGN PROFESSIONALS
T 281 302 2323
BUILDING ENVELOPE
BEAM
T 713 940 3201

CLINE ELEMENTARY SCHOOL CAMPUS REPLACEMENT

1550 WEST BOULEVARD, FRIENDSWOOD, TX 77546

ISSUE FOR CSP

FRIENDSWOOD INDEPENDENT SCHOOL DISTRICT

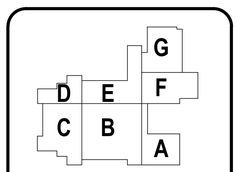

KEY PLAN

NORTH: PLAN TRUE

REGISTERED ARCHITECT MELISSA TURNBOUGH 31779 STATE OF TEXAS

Melissa Turnbough

DEC.17.2021

CLIENT
FRIENDSWOOD ISD

DATE	PROJECT NUMBER
DECEMBER 17, 2021	20380

DRAWING HISTORY

No.	Description	Date
1	ADDENDUM #1	01/12/2022

ISSUE FOR CSP

ENLARGED TOILET PLANS

A-412

File Path: C:_Revit\Local\20380_FISD CLINE ES_ARCH_R21_JiKim.rvt

CHECKED BY:
DL
DRAWN BY:
Author
Plot Stamp:
1/12/2022 9:49:13 AM

EXTERIOR ELEVATIONS

A-505

FOR BLUEBEAM LABELING/OCR:

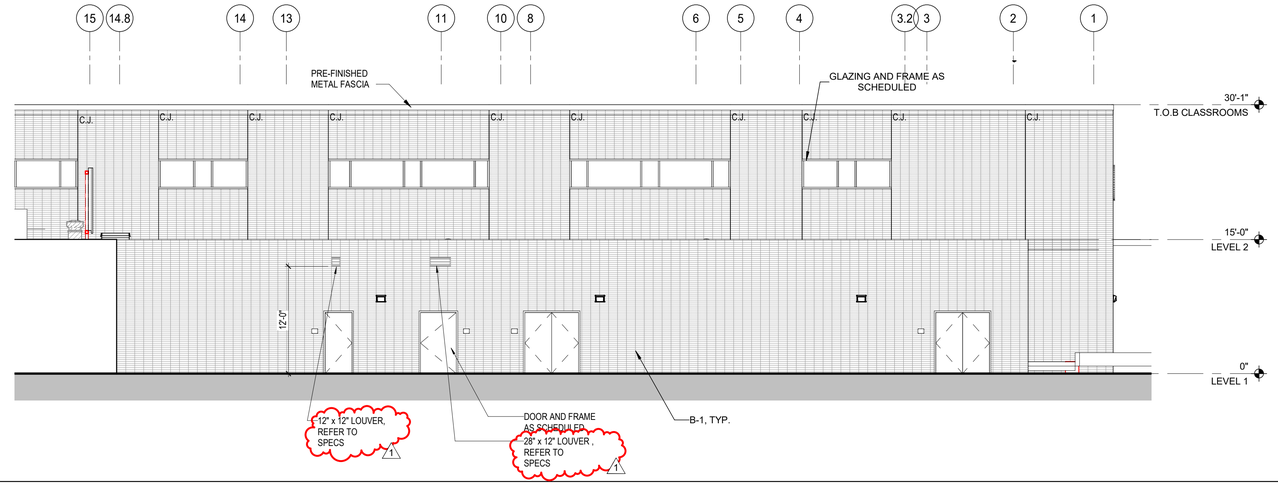

20 EAST ELEVATION - AREA G
1/8" = 1'-0"

MATERIAL CLASSIFICATION

B-1	NORMAN SIZE BRICK - CRIMSON IRONSPOT SMOOTH
B-2	NORMAN SIZE BRICK - EBONY IRONSPOT SMOOTH
MP-1	BERRIDGE HR-16 PANEL SYSTEM - AGED BRONZE
MP-2	BERRIDGE HS-12 - AGED BRONZE
R-1	RUSKIN EV211 - COLOR TBD
MST-1	MANUFACTURED STONE - ARRISCRAFT - OAKRIDGE SMOOTH

GENERAL NOTES

1. ALL BUILDING E.J. TO BE 1" UNLESS OTHERWISE NOTED
2. CONTROL JOINT IN MASONRY VENEER TO BE 3/8" TYPICAL UNLESS OTHERWISE NOTED
3. 1/2" EXPANSION JOINT FILLER ON BOTH ENDS OF ALL STEEL LINTEL ANGLES.
4. CONTRACTOR IS TO PROVIDE WALL MOCK-UP PER DETAIL 05/AS302
5. ALL EQUIPMENT BOXES MOUNTED TO BUILDING MUST BE PRE-FINISHED TO MATCH THE SURFACE IT IS AFFIXED TO.

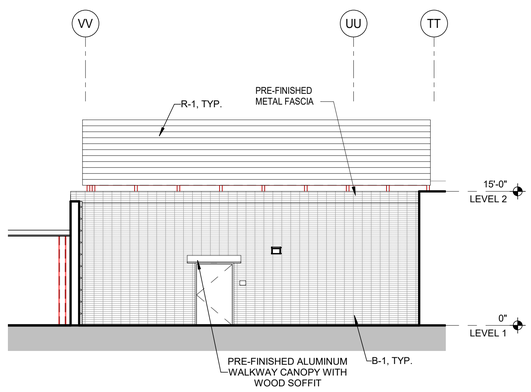

10 NORTH ELEVATION - AREA F
1/8" = 1'-0"

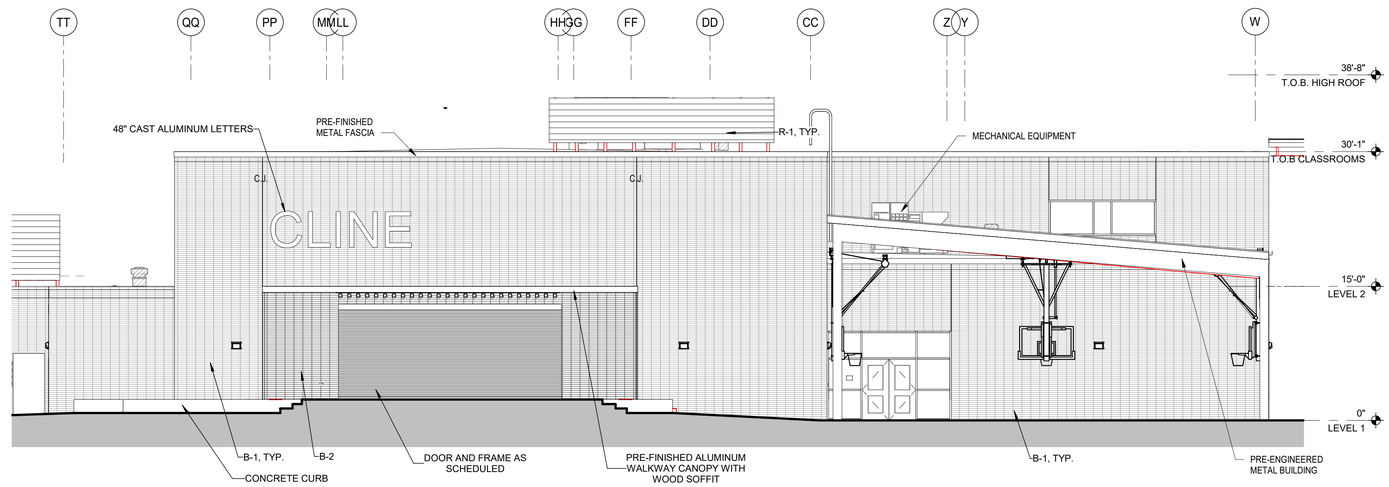

07 NORTH ELEVATION - AREA G
1/8" = 1'-0"

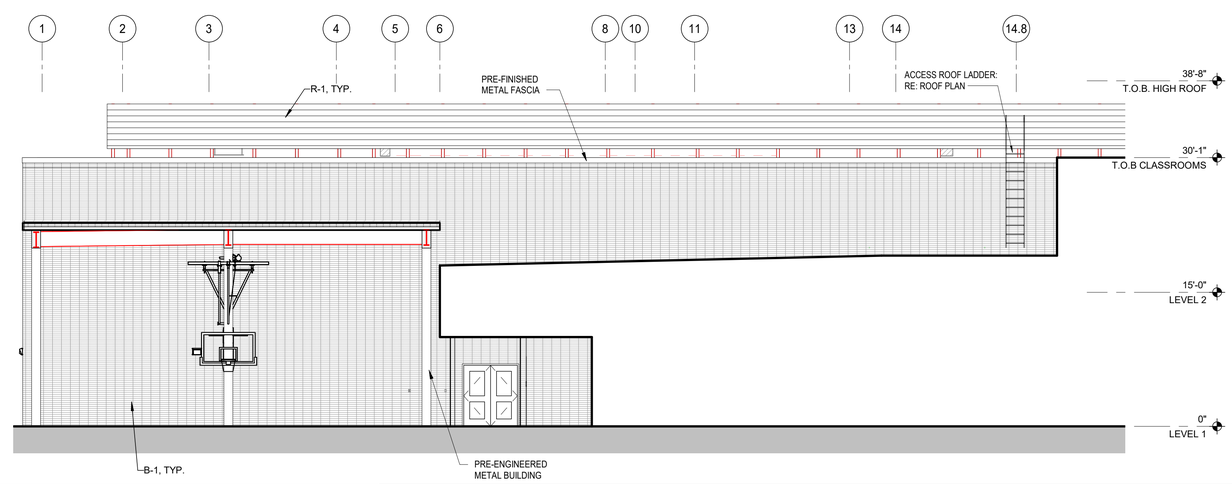

03 WEST ELEVATION - AREA G
1/8" = 1'-0"

PBK

ARCHITECT
PBK Architects, Inc.
PBK.com
HOUSTON
11 Greenway Plaza, 22nd Floor
Houston, TX 77046
713-965-0608 P
713-961-4571 F
TX Firm: BR 1608

CIVIL
DIG ENGINEERS
T 713 940 3238
STRUCTURAL
KUBALA ENGINEERS
T 800 248 3674
MEP/T
LEAF ENGINEERS
T 713 940 3300
FOOD SERVICE
FOODSERVICE DESIGN PROFESSIONALS
T 281 302 2323
BUILDING ENVELOPE
BEAM
T 713 940 3201

CLINE ELEMENTARY SCHOOL CAMPUS REPLACEMENT

1550 WEST BOULEVARD, FRIENDSWOOD, TX 77546

ISSUE FOR CSP

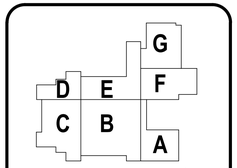

KEY PLAN

NORTH: PLAN TRUE

REGISTERED ARCHITECT
MELISSA TURNBOUGH
31773
STATE OF TEXAS

Melissa Turnbough

DEC.17.2021

CLIENT
FRIENDSWOOD ISD

DATE	PROJECT NUMBER
DECEMBER 17, 2021	20380

DRAWING HISTORY

No.	Description	Date
1	ADDENDUM #1	01/12/2022

ISSUE FOR CSP

EXTERIOR ELEVATIONS

A-505

File Path: C:_Revit\Local\20380_FISD CLINE ES_ARCH_R21_JiKim.rvt

CHECKED BY:
DL
DRAWN BY:
Author
Plot Stamp:
1/12/2022 10:13:03 AM

WALL SECTION DETAILS

A-722

FOR BLUEBEAM LABELING/OCR:

0"

1"

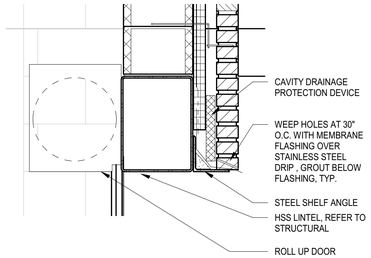

18 WALL SECTION @ ROLL UP DOOR
1" = 1'-0"

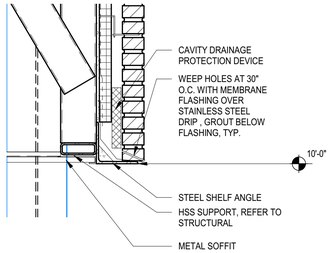

13 WALL SECTION @ METAL SOFFIT
1" = 1'-0"

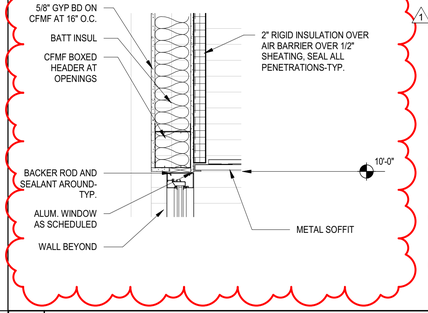

08 WALL SECTION @ SF HEAD
1" = 1'-0"

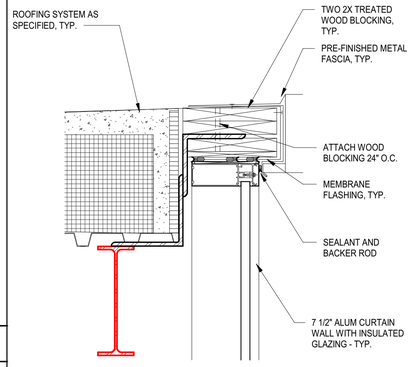

17 WALL SECTION @ CW HEAD
1 1/2" = 1'-0"

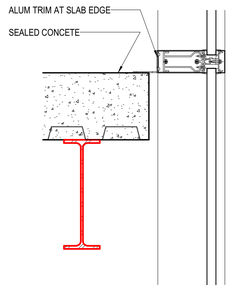

07 WALL SECTION @ SLAB EDGE
1 1/2" = 1'-0"

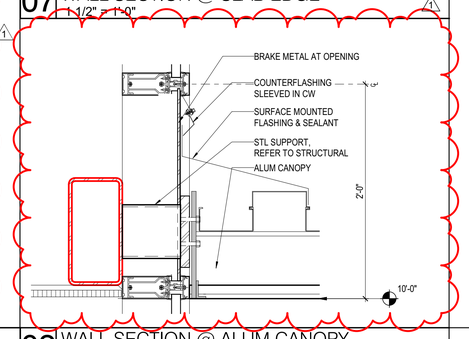

02 WALL SECTION @ ALUM CANOPY
1 1/2" = 1'-0"

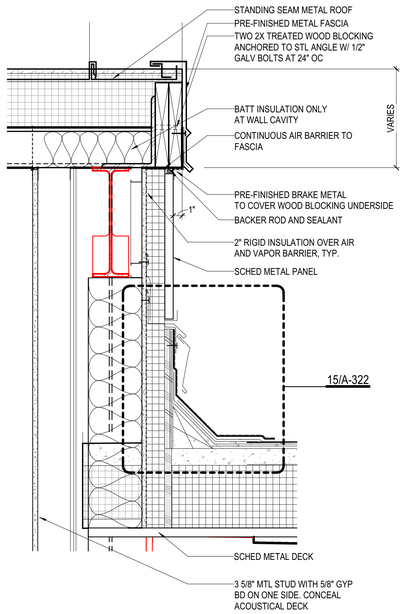

11 SECTION DETAIL @ SLOPED ROOF EDGE
1 1/2" = 1'-0"

PBK

ARCHITECT PBK Architects, Inc.
HOUSTON PBK.com
11 Greenway Plaza, 22nd Floor
Houston, TX 77046
713-965-0608 P
713-961-4571 F
TX Firm: BR 1608

CIVIL
DIG ENGINEERS
T 713 940 3238
STRUCTURAL
KUBALA ENGINEERS
T 800 248 3674
MEP/T
LEAF ENGINEERS
T 713 940 3300
FOOD SERVICE
FOODSERVICE DESIGN PROFESSIONALS
T 281 350 2323
BUILDING ENVELOPE
BEAM
T 713 940 3201

CLINE ELEMENTARY SCHOOL CAMPUS REPLACEMENT

1550 WEST BOULLEVARD, FRIENDSWOOD, TX 77546

ISSUE FOR CSP

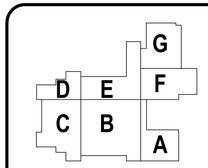

KEY PLAN

NORTH: PLAN TRUE

Melissa Turnbough

DEC.17.2021

CLIENT
FRIENDSWOOD ISD

DATE	PROJECT NUMBER
DECEMBER 17, 2021	20380

DRAWING HISTORY

No.	Description	Date
1	ADDENDUM #1	01/12/2022

ISSUE FOR CSP

WALL SECTION DETAILS

A-722

File Path: C:_Revit\Local\20380_FISD CLINE ES_ARCH_R21_dnunezpbk.rvt

CHECKED BY:
DL
DRAWN BY:
Author
Plot Stamp:
1/11/2022 3:58:07 PM

DOOR, WINDOW AND FRAME DETAILS

A-731

FOR BLUEBEAM LABELING OCR:

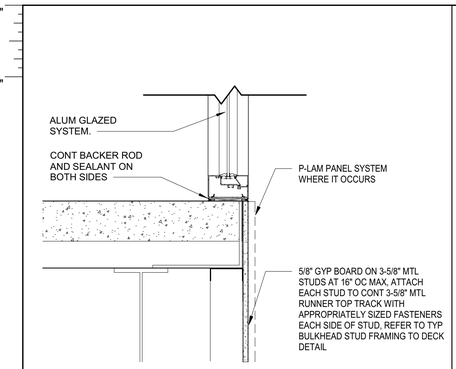

20 ALUM WINDOW SILL @ SLAB EDGE
1 1/2" = 1'-0"

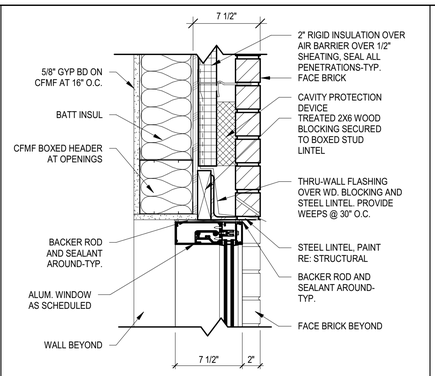

19 ALUM CW HEAD @ BRICK ON CFMF
1 1/2" = 1'-0"

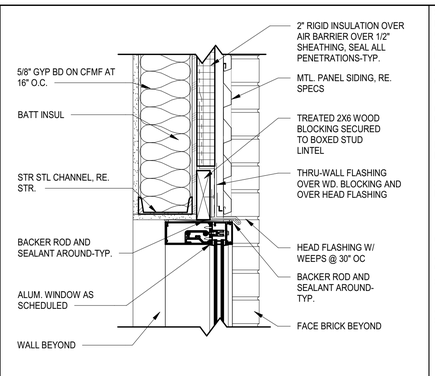

18 ALUM CW HEAD @ MTL PNL
1 1/2" = 1'-0"

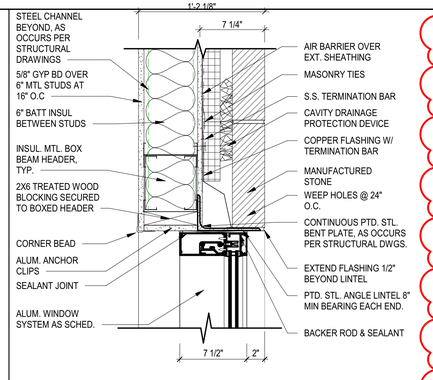

17 ALUM CW HEAD @ MANUF. STONE
1 1/2" = 1'-0"

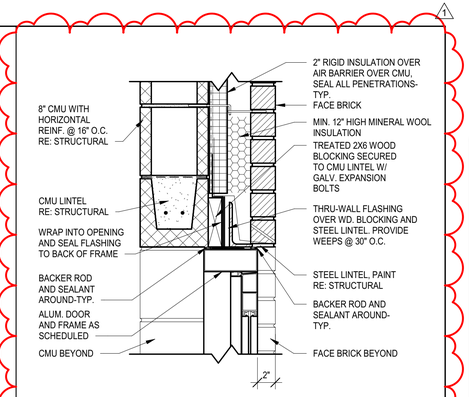

16 ALUM DOOR HEAD @ BRICK ON CMU
1 1/2" = 1'-0"

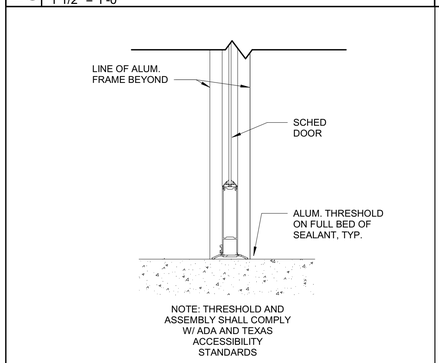

15 ALUM DR THRESHOLD @ 3 5/8" MTL STD
1 1/2" = 1'-0"

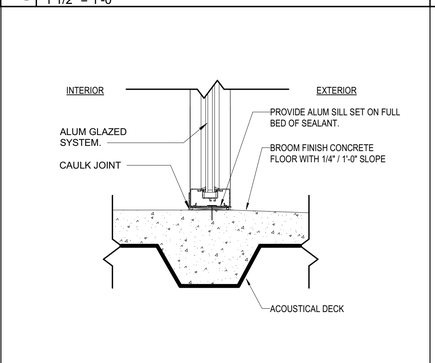

14 ALUM WINDOW SILL @ BALCONY
1 1/2" = 1'-0"

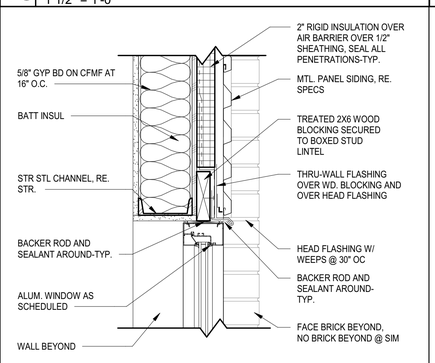

13 ALUM WINDOW HEAD @ MTL PNL
1 1/2" = 1'-0"

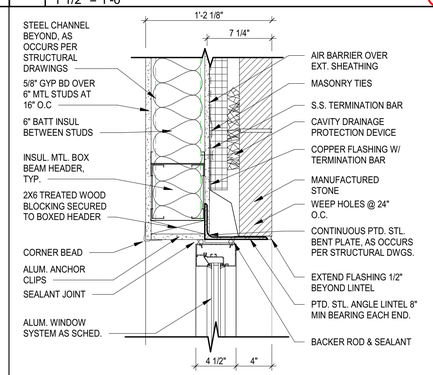

12 ALUM WINDOW HEAD @ MANUF. STONE
1 1/2" = 1'-0"

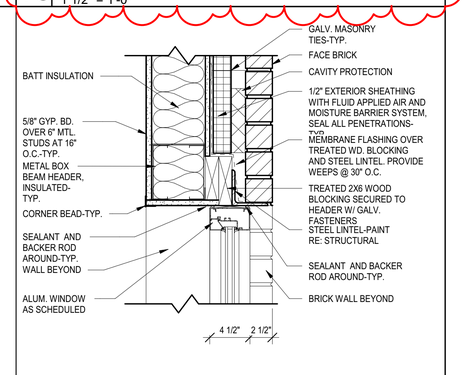

11 ALUM WINDOW HEAD @ BRICK ON CFMF
1 1/2" = 1'-0"

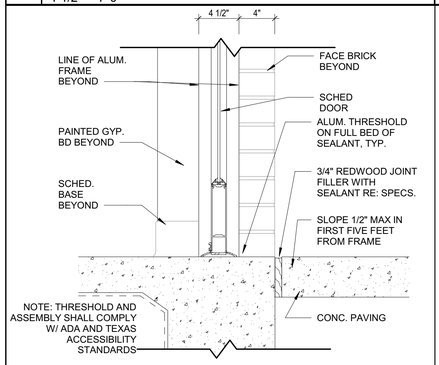

10 EXT. DR THRESHOLD @ MTL STD
1 1/2" = 1'-0"

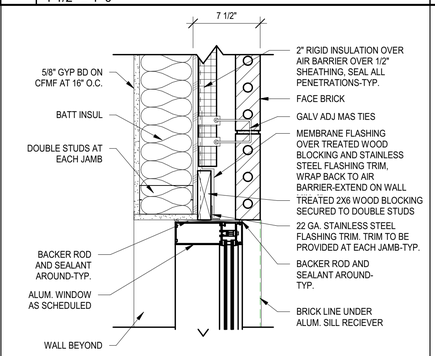

09 ALUM CW JAMB @ BRICK ON CFMF @ STAIRS
1 1/2" = 1'-0"

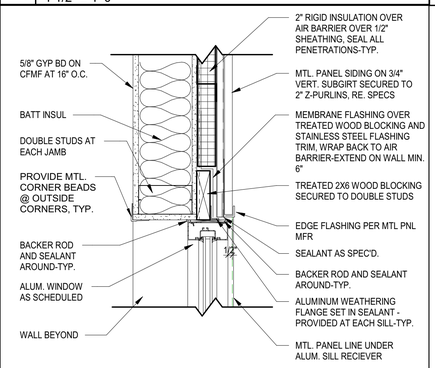

08 ALUM WINDOW JAMB @ MTL PANEL
1 1/2" = 1'-0"

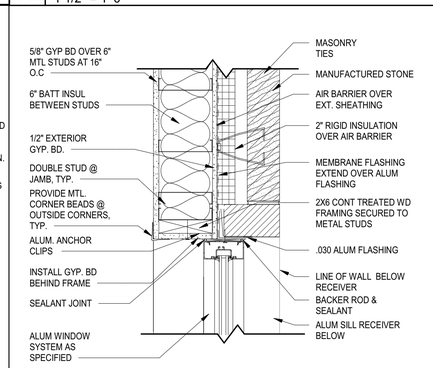

07 ALUM WINDOW JAMB @ MANUF. STONE
1 1/2" = 1'-0"

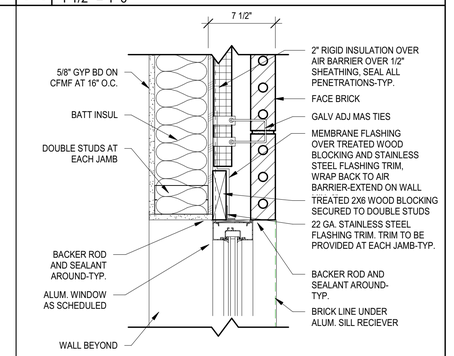

06 ALUM WIN JAMB @ BRICK ON CFMF
1 1/2" = 1'-0"

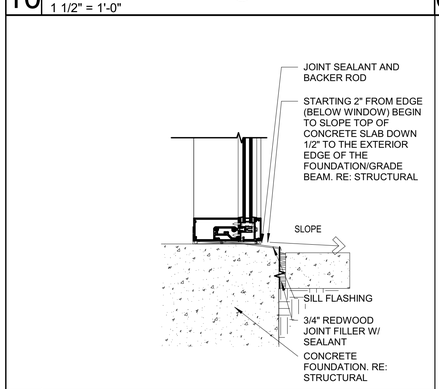

05 ALUM CW SILL @ FOUNDATION
1 1/2" = 1'-0"

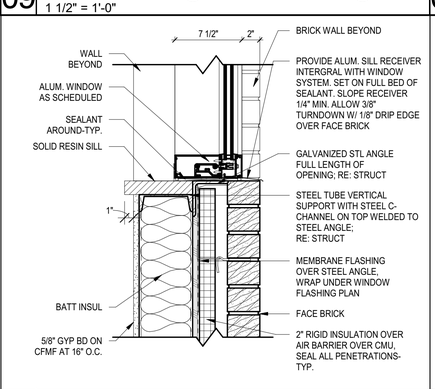

04 ALUM CW SILL @ BRICK ON CFMF @ STAIRS
1 1/2" = 1'-0"

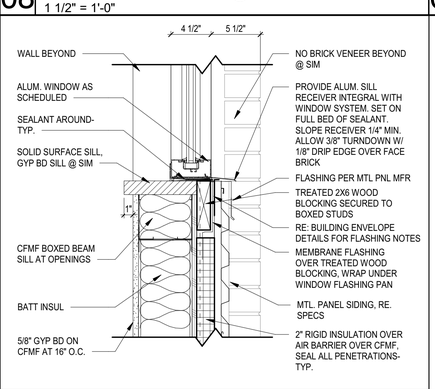

03 ALUM WINDOW SILL @ MTL PNL
1 1/2" = 1'-0"

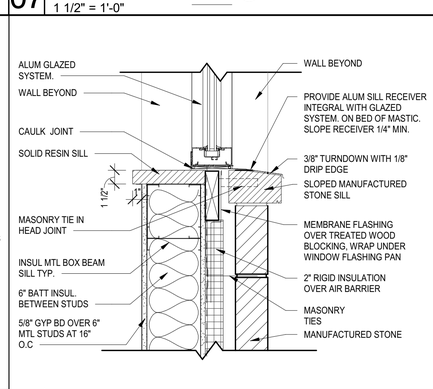

02 ALUM WINDOW SILL @ MANUF. STONE
1 1/2" = 1'-0"

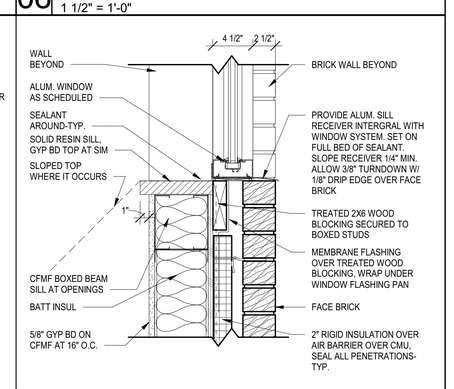

01 ALUM WINDOW SILL @ BRICK ON CFMF
1 1/2" = 1'-0"

PBK

ARCHITECT
PBK Architects, Inc.
HOUSTON PBK.com
11 Greenway Plaza, 22nd Floor
Houston, TX 77046
713-965-0608 P
713-961-4571 F
TX Firm: BR 1608

CIVIL
DIG ENGINEERS
T 713 940 3238
STRUCTURAL
KUBALA ENGINEERS
T 800 248 3674
MEP/T
LEAF ENGINEERS
T 713 940 3300
FOOD SERVICE
FOODSERVICE DESIGN PROFESSIONALS
T 281 350 2323
BUILDING ENVELOPE
BEAM
T 713 940 3201

CLINE ELEMENTARY SCHOOL CAMPUS REPLACEMENT

1550 WEST BOULEVARD, FRIENDSWOOD, TX 77546

ISSUE FOR CSP

FRIENDSWOOD INDEPENDENT SCHOOL DISTRICT

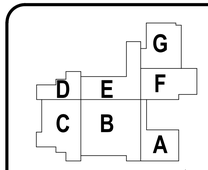

KEY PLAN

NORTH: PLAN TRUE

REGISTERED ARCHITECT
MELISSA TURNBOUGH
21779
STATE OF TEXAS

Melissa Turnbough

DEC 17 2021

CLIENT
FRIENDSWOOD ISD

DATE	PROJECT NUMBER
DECEMBER 17, 2021	20380

DRAWING HISTORY

No.	Description	Date
1	ADDENDUM #1	01/12/2022

ISSUE FOR CSP

DOOR, WINDOW AND FRAME DETAILS

A-731

File Path: C:_Revit\Local\20380_FISD CLINE ES_ARCH_R21_dnunezpbk.rvt

CHECKED BY:
DL
DRAWN BY:
Author
Plot Stamp:
1/11/2022 3:58:10 PM

FRAME ELEVATIONS - CURTAIN WALL

A-807

FOR BLUEBEAM LABELING/OCR:

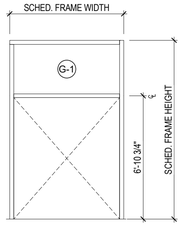

20 CW-9
1/4" = 1'-0"

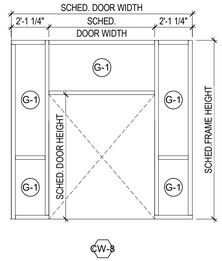

19 CW-8
1/4" = 1'-0"

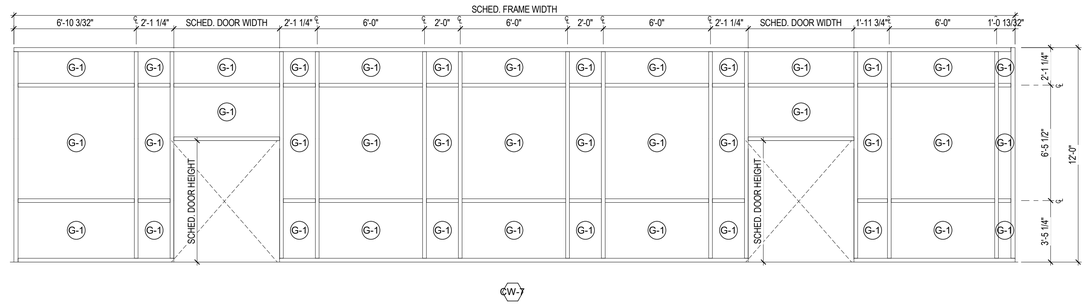

18 CW-7
1/4" = 1'-0"

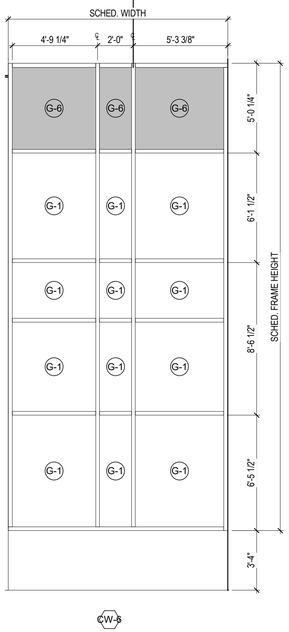

10 CW-6
1/4" = 1'-0"

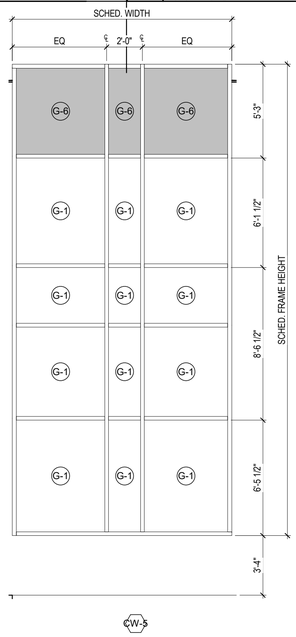

09 CW-5
1/4" = 1'-0"

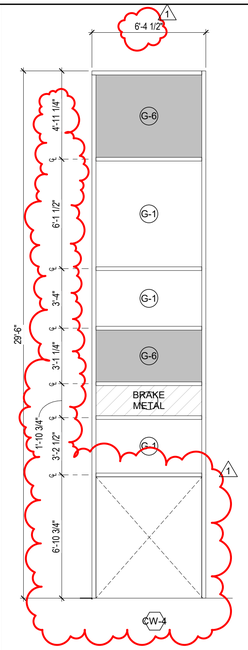

08 CW-4
1/4" = 1'-0"

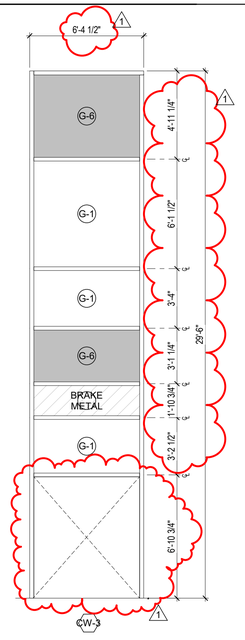

07 CW-3
1/4" = 1'-0"

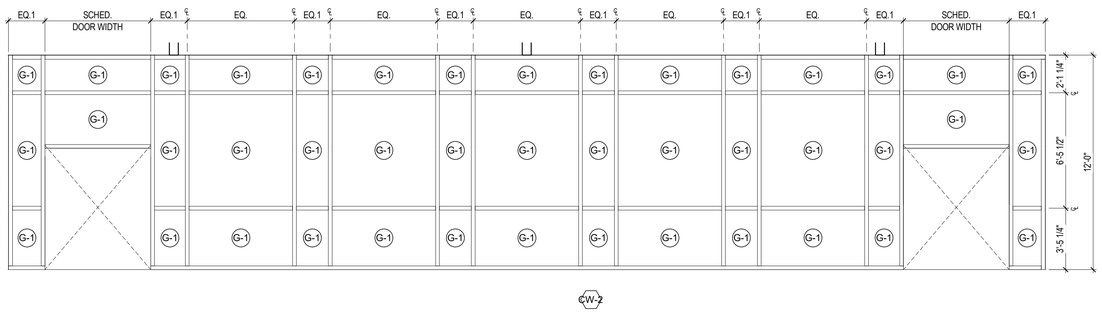

05 CW-2
1/4" = 1'-0"

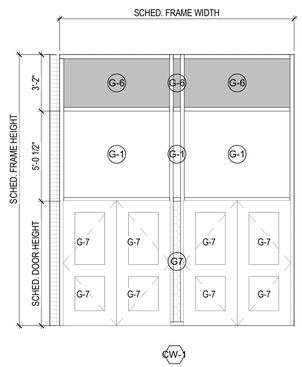

02 CW-1
1/4" = 1'-0"

G-1 INSULATED GLASS: 1 INCH SEALED INSULATED UNIT CONSISTING OF AN EXTERIOR LITE OF 1/4 INCH LOW-E TINTED TEMPERED FLOAT GLASS, 1/2 INCH GAS FILLED AIR SPACE, AND 1/4 INCH CLEAR TEMPERED FLOAT GLASS INTERIOR LITE.

G-3 CLEAR, TEMPERED FLOAT GLASS: 1/4 INCH THICK GLAZING QUALITY, CLEAR TEMPERED FLOAT GLASS.

G-6 TINTED, SPANDREL GLASS: 1 INCH THICK TINTED SPANDREL GLASS WITH COLOR LEAD-FREE CERAMIC FRIT, FIRE-FUSED TO ITS INTERIOR SURFACE TO MATCH TINTED, TEMPERED FLOAT GLASS SPECIFIED AS TYPE G1.

G-7 SECURITY LOW-E INSULATING GLASS UNIT COMPRISED OF GLASS TYPE G-8 EXTERIOR LITE, 1/4" INCH THICK CLEAR TEMPERED FLOAT GLASS INTERIOR LITE, GLASS UNIT SHALL MEET OR EXCEED PROPERTIES OF GLASS TYPE G-1

G-8 LAMINATED SECURITY GLASS UNIT COMPRISED OF A 1/4 INCH TICK CLEAR ANNEALED EXTERIOR LITE, PVB FILM LAYER, 1/4 INCH THICK CLEAR INTERIOR LITE

GLASS TYPES
1/8" = 1'-0"

PBK

ARCHITECT
PBK Architects, Inc.
PBK.com
HOUSTON
11 Greenway Plaza, 22nd Floor
Houston, TX 77046
713-965-0608 P
713-961-4571 F
TX Firm: BR 1608

CIVIL
DIG ENGINEERS
T 713 940 3238
STRUCTURAL
KUBALA ENGINEERS
T 800 248 3674
MEP/T
LEAF ENGINEERS
T 713 940 3300
FOOD SERVICE
FOODSERVICE DESIGN PROFESSIONALS
T 281 302 2323
BUILDING ENVELOPE
BEAM
T 713 940 3201

CLINE ELEMENTARY SCHOOL CAMPUS REPLACEMENT

1550 WEST BOULEVARD, FRIENDSWOOD, TX 77546

ISSUE FOR CSP

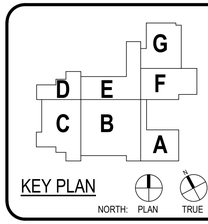

KEY PLAN

NORTH: PLAN TRUE

REGISTERED ARCHITECT
MELISSA TURNBOUGH
21773
STATE OF TEXAS

Melissa Turnbough

Dec. 17. 2021

CLIENT
FRIENDSWOOD ISD

DATE
DECEMBER 17, 2021

PROJECT NUMBER
20380

DRAWING HISTORY

No.	Description	Date
1	ADDENDUM #1	01/12/2022

ISSUE FOR CSP

FRAME ELEVATIONS - CURTAIN WALL

A-807

File Path: C:_RevitLocal\20380_FISD CLINE ES_ARCH_R21_JIKim.rvt

CHECKED BY:
DL
DRAWN BY:
Author
Plot Stamp:
1/12/2022 10:47:26 AM

CASEWORK ELEVATIONS, SECTIONS & DETAILS

A-844

FOR BLUEBEAM LABELING:OCR:

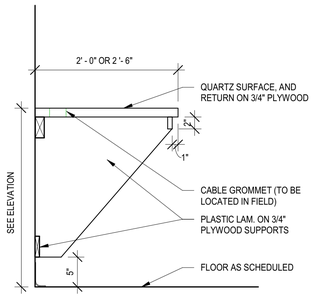

20 TYP COUNTER TOP
1" = 1'-0"

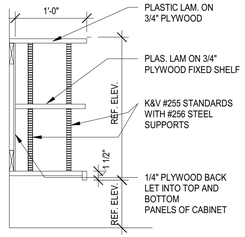

19 TYP CABINET - UPPER CABINET OPEN SHELVING
1" = 1'-0"

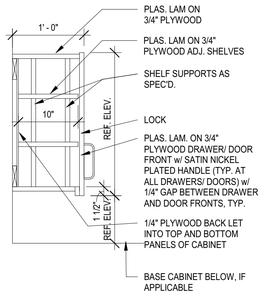

18 TYP CABINET - UPPER CABINET
1" = 1'-0"

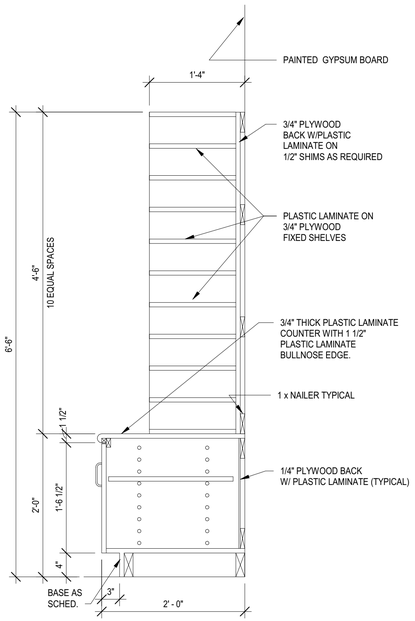

12 CABINET SECTION
1" = 1'-0"

GENERAL CASEWORK NOTES

1. BASIS-OF-DESIGN FOR ALL NON-SCIENCE CASEWORK SHALL BE _____, U.N.O.
2. BASIS-OF-DESIGN FOR ALL SCIENCE CASEWORK SHALL BE _____, U.N.O.
3. FIELD VERIFY ALL CASEWORK-RELATED DIMENSIONS PRIOR TO FABRICATION AND INSTALLATION
4. VERIFY ALL COLUMN LOCATIONS PRIOR TO FABRICATION AND INSTALLATION
5. REFER TO MEPT DOCUMENTS FOR ALL DATA OUTLETS AND DEVICES, ELECTRICAL OUTLETS AND DEVICES, AND PLUMBING FIXTURES, NOTIFY ARCHITECT OF ANY CONFLICTS PRIOR TO FABRICATION AND INSTALLATION
6. ALL CASEWORK BASE CABINETS SHALL BE 24 INCHES IN DEPTH, U.N.O.
7. ALL CASEWORK UPPER WALL CABINETS SHALL BE 14 INCHES IN DEPTH, U.N.O.
8. ALL TYPICAL COUNTERTOPS, VERTICAL SURFACES, NOSINGS, AND BACK SPLASHES SHALL BE PLASTIC LAMINATE FINISH, U.N.O.
9. ALL SCIENCE COUNTERTOPS AND BACK SPLASHES SHALL BE EPOXY RESIN, U.N.O.
10. ALL COUNTERTOP, BACKSPLASHES W/ SINK SHALL BE SOLID SURFACE, U.N.O.
11. PROVIDE AND INSTALL SIDE SPLASHES WHERE COUNTER TOP ENDS ABUT WALL SURFACES
12. PROVIDE AND INSTALL 4 INCH HIGH TOE SPACE WITH WALL BASE AT ALL CASEWORK, WALL BASE TO MATCH ROOM WALL BASE
13. PROVIDE AND INSTALL WALL ANCHORED VERTICAL SUPPORTS AT ALL KNEE SPACES GREATER THAN 48 INCHES WIDE
14. PROVIDE AND INSTALL GROMMETS WITH SLEEVES AT ALL KNEE SPACES
15. ALL CASEWORK UNITS 36 INCHES WIDE AND GREATER WITH SHELVING SHALL HAVE A CENTER FIXED SHELF
16. ALL SHELVING 36 INCHES WIDE AND GREATER SHALL BE SHALL BE 1 INCH THICK MINIMUM
17. ALL ADJUSTABLE SHELVING SHALL HAVE RECESSED STANDARDS HARDWARE
18. PROVIDE AND INSTALL FILLER PANELS WITH TOP RETURNS AT ALL SIDES, CORNERS, AND COLUMNS TO PREVENT THE CONTACT OF DOORS WITH ADJACENT SURFACES
19. PROVIDE AND INSTALL LOCKS AT ALL BASE CABINETS AND ALL UPPER WALL CABINETS

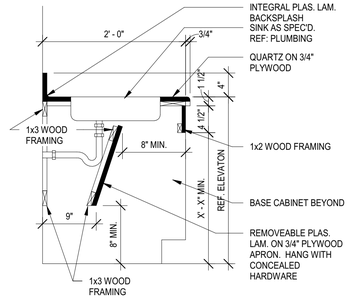

11 CASEWORK SECTION AT ADA SINK
1" = 1'-0"

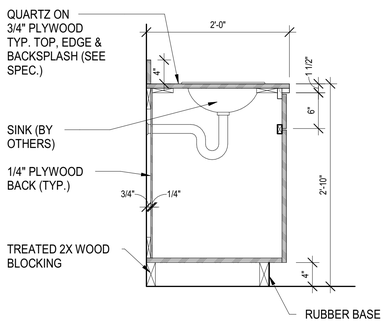

15 CASEWORK SECTION AT SINK
1" = 1'-0"

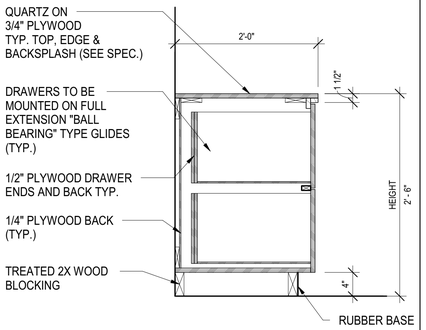

14 TYP BASE CAB - 2 FILE DRAWERS 2 DOORS
1" = 1'-0"

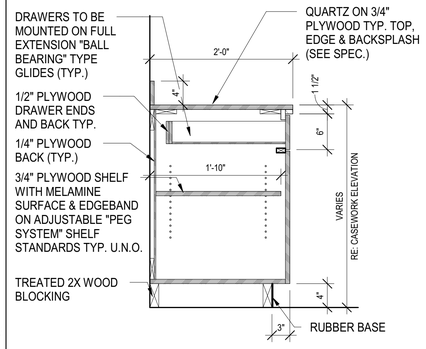

13 TYP BASE CABINET - 1 DRAWER
1" = 1'-0"

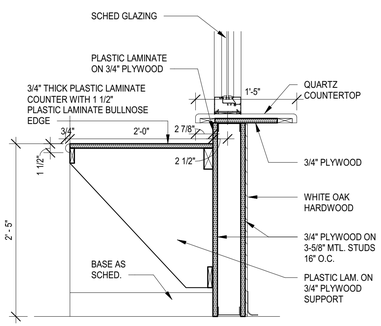

10 CASHIER SECTION
1" = 1'-0"

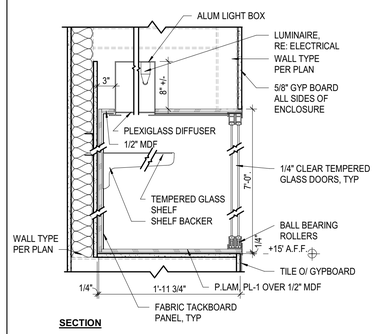

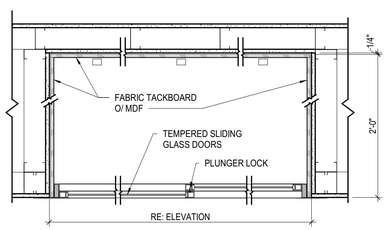

09 DISPLAY CASE - PLAN & SECTION
1" = 1'-0"

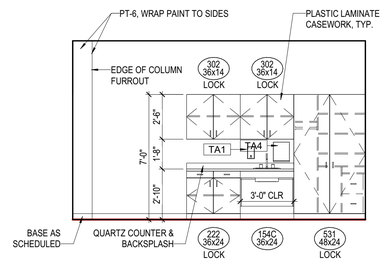

07 D108 ECSC SOUTH
1/4" = 1'-0"

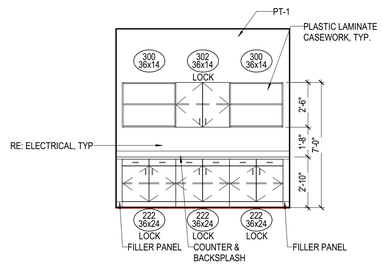

06 D111 RESOURCE NORTH
1/4" = 1'-0"

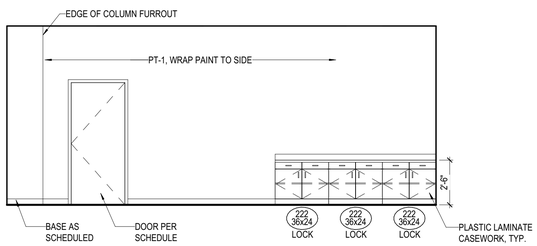

05 E203 LEARNING STUDIO WEST
1/4" = 1'-0"

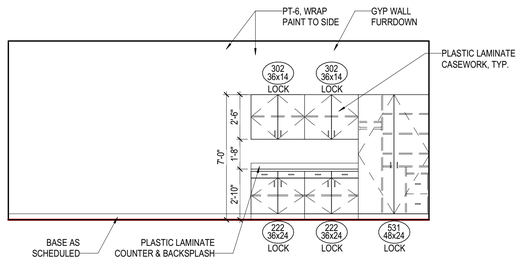

03 TYP CLASSROOM CASEWORK ELEVATION
1/4" = 1'-0"

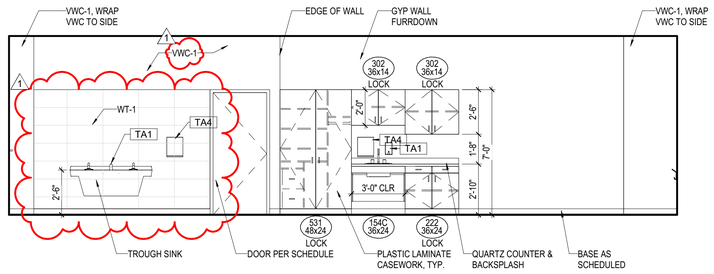

02 TYP KINDER CASEWORK ELEVATION
1/4" = 1'-0"

PBK

ARCHITECT PBK Architects, Inc.
HOUSTON PBK.com
11 Greenway Plaza, 22nd Floor
Houston, TX 77046
713-965-0608 P
713-961-4571 F
TX Firm: BR 1608

CIVIL
DIG ENGINEERS
T 713 940 3238
STRUCTURAL
KUBALA ENGINEERS
T 800 248 3674
MEPT
LEAF ENGINEERS
T 713 940 3300
FOOD SERVICE
FOODSERVICE DESIGN PROFESSIONALS
T 281 350 2323
BUILDING ENVELOPE
BEAM
T 713 940 3201

CLINE ELEMENTARY SCHOOL
CAMPUS REPLACEMENT

1550 WEST BOULEVARD, FRIENDSWOOD, TX 77546

ISSUE FOR CSP

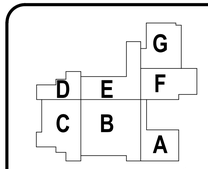

KEY PLAN

NORTH: PLAN TRUE

REGISTERED ARCHITECT
MELISSA TURNBAUGH
21778
STATE OF TEXAS

Melissa Turnbaugh

DEC 17 2021

CLIENT
FRIENDSWOOD ISD

DATE	PROJECT NUMBER
DECEMBER 17, 2021	20380

DRAWING HISTORY

No.	Description	Date
1	ADDENDUM #1	01/12/2022

ISSUE FOR CSP

CASEWORK ELEVATIONS, SECTIONS & DETAILS

A-844

File Path: C:_Revit\Local\20380_FISD CLINE ES_ARCH_R21_dnunezpbk.rvt

CHECKED BY:
DL
DRAWN BY:
Author
Plot Stamp:
1/11/2022 3:58:22 PM

1ST LEVEL - FINISH PLAN - AREA B

AF101B

FOR BLUEBEAM LABELING/OCR:

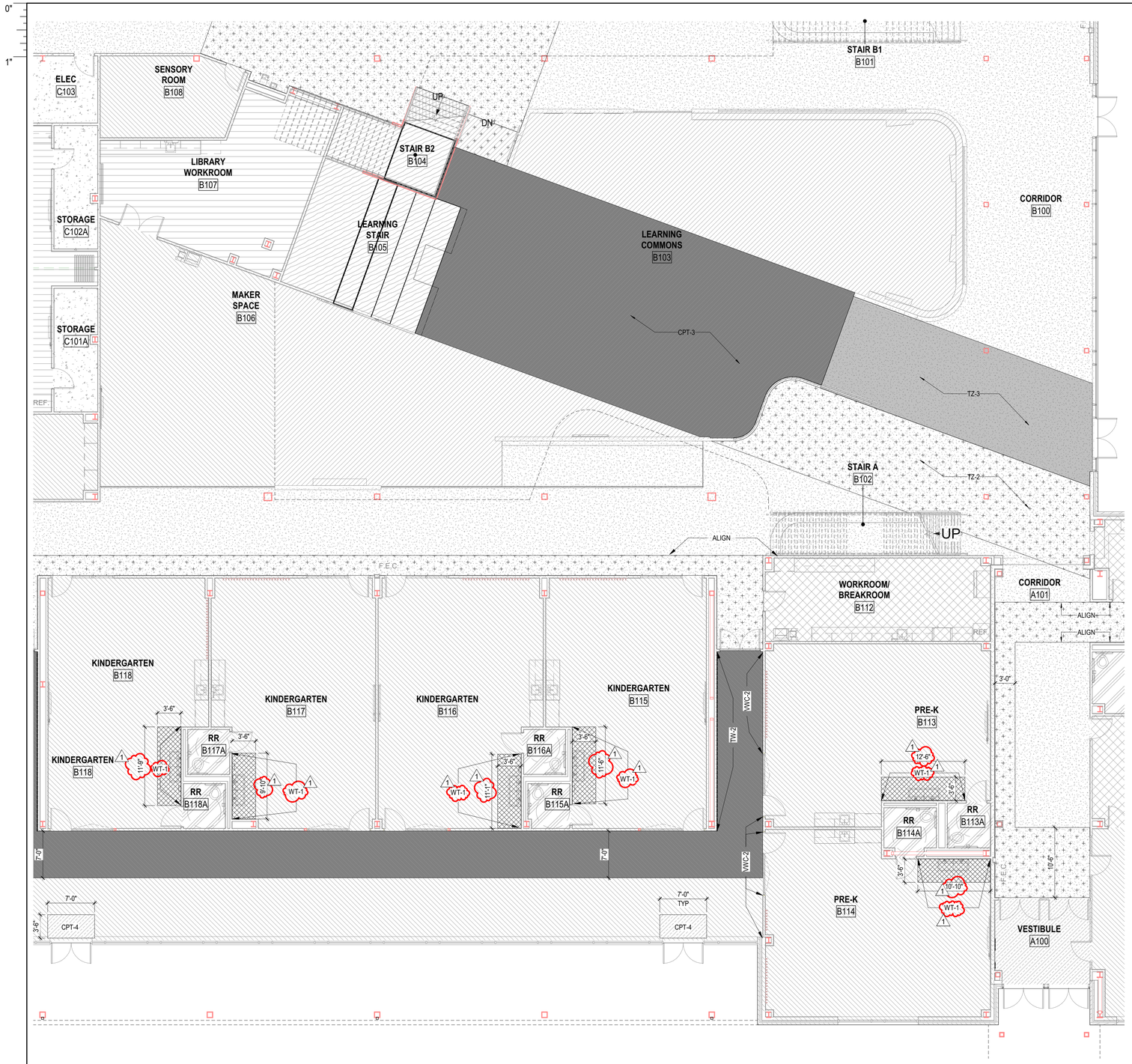

FLOOR FINISH LEGEND

- AF-1 ATHLETIC FLOORING *RE: FINISH SCHEDULE*
- AF-2 ATHLETIC FLOORING *RE: FINISH SCHEDULE*
- RB-1 RUBBER FLOORING *RE: FINISH SCHEDULE*
- SC-1 SEALED CONCRETE *RE: FINISH SCHEDULE*
- CPT-1, CARPET *RE: FINISH SCHEDULE*
- CPT-2, CARPET *RE: FINISH SCHEDULE*
- CPT-3, CARPET *RE: FINISH SCHEDULE*
- CPT-4, WALK OFF CARPET *RE: FINISH SCHEDULE*
- EPF-1, EPOXY FLOORING *RE: FINISH SCHEDULE*
- LVT-1, LUXURY VINYL TILE *RE: FINISH SCHEDULE*
- LVT-2, LUXURY VINYL TILE *RE: FINISH SCHEDULE*
- TZ-1, TERRAZZO FLOORING *RE: FINISH SCHEDULE*
- TZ-2, TERRAZZO FLOORING *RE: FINISH SCHEDULE*
- TZ-3, TERRAZZO FLOORING *RE: FINISH SCHEDULE*
- WF-1, WOOD FLOORING *RE: FINISH SCHEDULE*
- WF-2, MASONITE *RE: FINISH SCHEDULE*

05 1ST LEVEL - FINISH PLAN - AREA B
1/8" = 1'-0"

PBK

ARCHITECT PBK Architects, Inc.
HOUSTON PBK.com
11 Greenway Plaza, 22nd Floor
Houston, TX 77046
713-965-0608 P
713-961-4571 F
TX Firm: BR 1608

CIVIL
DIG ENGINEERS
T 713 940 3238
STRUCTURAL
KUBALA ENGINEERS
T 800 248 3674
MEP/T
LEAF ENGINEERS
T 713 940 3300
FOOD SERVICE
FOODSERVICE DESIGN PROFESSIONALS
T 281 350 2323
BUILDING ENVELOPE
BEAM
T 713 940 3201

CLINE ELEMENTARY SCHOOL CAMPUS REPLACEMENT

1550 WEST BOULLEVARD, FRIENDSWOOD, TX 77546

ISSUE FOR CSP

FRIENDSWOOD INDEPENDENT SCHOOL DISTRICT

KEY PLAN

G D E F C B A

NORTH: PLAN TRUE

REGISTERED ARCHITECT MELISSA TURNBOUGH 21773 STATE OF TEXAS

Melissa Turnbough

DEC 17 2021

CLIENT
FRIENDSWOOD ISD

DATE	PROJECT NUMBER
DECEMBER 17, 2021	20380

DRAWING HISTORY

No.	Description	Date
1	ADDENDUM #1	01/12/2022

ISSUE FOR CSP

1ST LEVEL - FINISH PLAN - AREA B

AF101B

File Path: C:_Revit\Local\20380_FISD CLINE ES_ARCH_R21_dnunezpbk.rvt

CHECKED BY:
DL
DRAWN BY:
Author
Plot Stamp:
1/11/2022 3:58:37 PM

1ST LEVEL - FINISH PLAN - AREA C

AF101C

FOR BLUEBEAM LABELING:OCR:

FLOOR FINISH LEGEND

- AF-1 ATHLETIC FLOORING *RE: FINISH SCHEDULE*
- AF-2 ATHLETIC FLOORING *RE: FINISH SCHEDULE*
- RB-1 RUBBER FLOORING *RE: FINISH SCHEDULE*
- SC-1 SEALED CONCRETE *RE: FINISH SCHEDULE*
- CPT-1, CARPET *RE: FINISH SCHEDULE*
- CPT-2, CARPET *RE: FINISH SCHEDULE*
- CPT-3, CARPET *RE: FINISH SCHEDULE*
- CPT-4, WALK OFF CARPET *RE: FINISH SCHEDULE*
- EPF-1, EPOXY FLOORING *RE: FINISH SCHEDULE*
- LVT-1, LUXURY VINYL TILE *RE: FINISH SCHEDULE*
- LVT-2, LUXURY VINYL TILE *RE: FINISH SCHEDULE*
- TZ-1, TERRAZZO FLOORING *RE: FINISH SCHEDULE*
- TZ-2, TERRAZZO FLOORING *RE: FINISH SCHEDULE*
- TZ-3, TERRAZZO FLOORING *RE: FINISH SCHEDULE*
- WF-1, WOOD FLOORING *RE: FINISH SCHEDULE*
- WF-2, MASONITE *RE: FINISH SCHEDULE*

06 1ST LEVEL - FINISH PLAN - AREA C
1/8" = 1'-0"

PBK

ARCHITECT PBK Architects, Inc.
HOUSTON PBK.com
11 Greenway Plaza, 22nd Floor
Houston, TX 77046
713-965-0608 P
713-961-4571 F
TX Firm: BR 1608

CIVIL
DIG ENGINEERS
T 713 940 3238
STRUCTURAL
KUBALA ENGINEERS
T 800 248 3674
MEPT
LEAF ENGINEERS
T 713 940 3300
FOOD SERVICE
FOODSERVICE DESIGN PROFESSIONALS
T 281 350 2323
BUILDING ENVELOPE
BEAM
T 713 940 3201

CLINE ELEMENTARY SCHOOL CAMPUS REPLACEMENT

1550 WEST BOULLEVARD, FRIENDSWOOD, TX 77546

ISSUE FOR CSP

FRIENDSWOOD INDEPENDENT SCHOOL DISTRICT

KEY PLAN

G D E F C B A

NORTH: PLAN TRUE

REGISTERED ARCHITECT MELISSA TURNBOUGH 31773 STATE OF TEXAS

Melissa Turnbough

Dec.17.2021

CLIENT
FRIENDSWOOD ISD

DATE	PROJECT NUMBER
DECEMBER 17, 2021	20380

DRAWING HISTORY

No.	Description	Date
1	ADDENDUM #1	01/12/2022

ISSUE FOR CSP

1ST LEVEL - FINISH PLAN - AREA C

AF101C

File Path: C:_Revit\Local\20380_FISD CLINE ES_ARCH_R21_dnunezpbk.rvt

CHECKED BY:
DL
DRAWN BY:
Author
Plot Stamp:
1/11/2022 3:58:41 PM

MECHANICAL 1ST LEVEL - FLOOR PLAN - AREA G

M-101G

FOR BLUEBEAM LABELING/OCR:

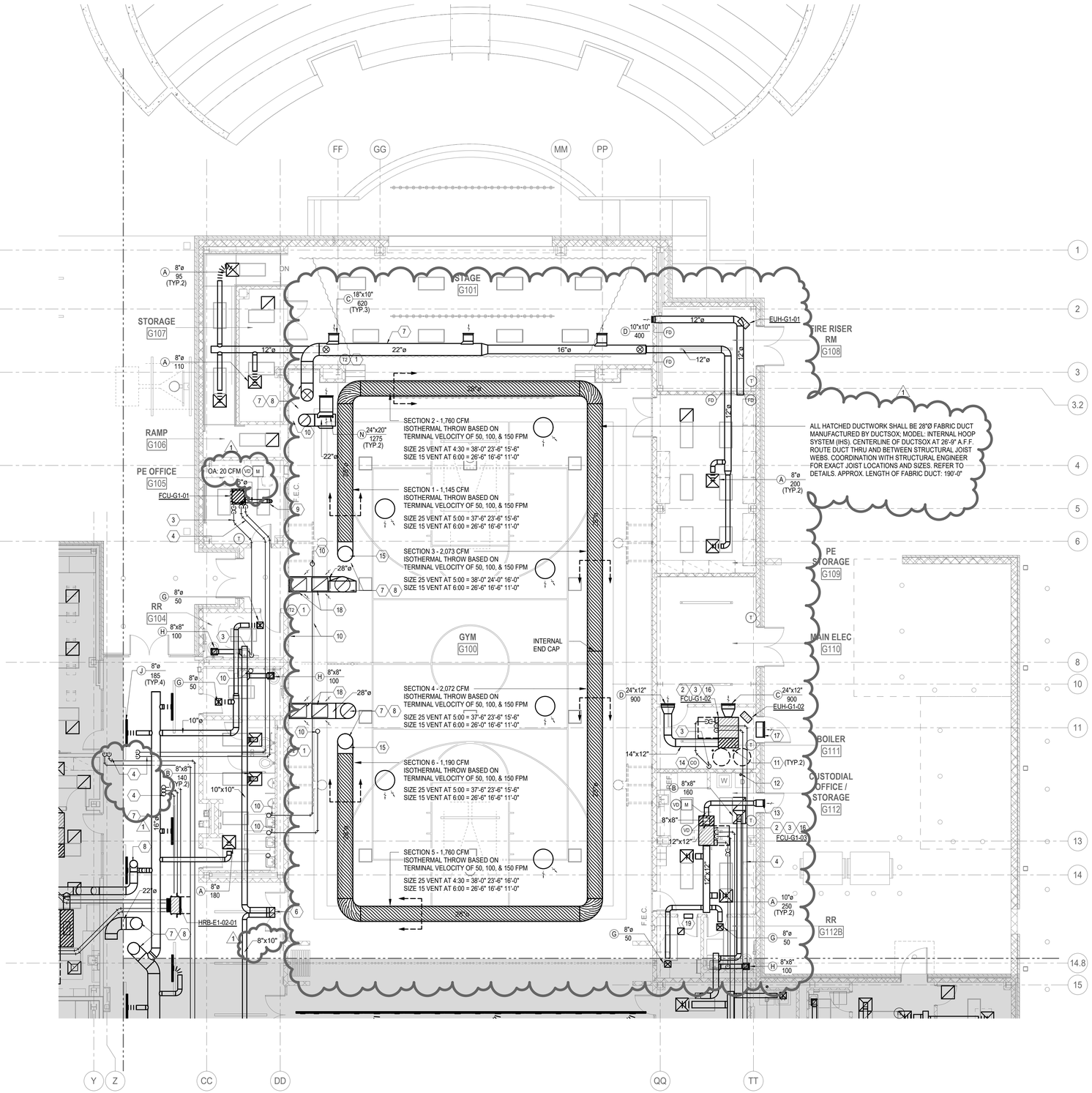

1 MECHANICAL 1ST LEVEL - FLOOR PLAN - AREA G
1/8" = 1'-0"

GENERAL NOTES

1. PRIOR TO INSTALLATION OF EQUIPMENT, VERIFY MANUFACTURER'S RECOMMENDED AND CODE REQUIRED CLEARANACE IS MAINTAINED.
2. COORDINATE ALL WORK WITH ALL OTHER TRADES.
3. ATTACH EQUIPMENT TO CURB AS REQUIRED TO RESIST UPLIFT DUE TO WINDS UP TO 152 MPH SPEED.
4. CONTRACTOR TO PROVIDE CONDENSATE DRAIN LINE FOR ALL UNITS. REFER TO PLUMBING DRAWINGS FOR CONDENSATE DRAIN LOCATIONS AND PIPE ROUTING. PROVIDE INSULATION AND ALUMINUM JACKETING FOR ALL EXPOSED CONDENSATE PIPING.
5. PROVIDE FIRE DAMPERS, SMOKE DAMPERS, OR COMBINATION FIRE/SMOKE DAMPERS IN ALL DUCTWORK ND RETURN AIR OPENINGS WHICH PENETRATE FIRE OR SMOKE RATED WALLS OR FLOOR SLABS. FIRE OR SMOKE RATED WALLS CAN INCLUDE BUT ARE NOT LIMITED TO CORRIDOR WALLS, MECHANICAL ROOMS, ELECTRICAL ROOMS, AND STORAGE ROOMS. REFER TO ARCHITECTURAL PLANS FOR PARTITION AND WALL TYPES INDICATING FIRE OR SMOKE RATED WALL LOCATION AND RATING.

KEYED NOTES

1. COMBINATION TEMPERATURE, HUMIDITY & CARBON DIOXIDE SENSOR.
2. FAN COIL UNIT SUSPENDED FROM STRUCTURE. PROVIDE 18" DEEP SHEET METAL RETURN AIR PLENUM WITH RETURN AIR OPENING WITH VOLUME DAMPER.
3. ROUTE 3/4"Ø CONDENSATE DRAIN LINE TO NEAREST FLOOR DRAIN OR LAVATORY P-TRAP AS SHOWN. REFER TO PLUMBING DRAWINGS FOR EXACT DRAIN LOCATION.
4. ROUTE LIQUID & SUCTION REFRIGERANT LINES FROM INDOOR FAN COIL UNIT TO OUTDOOR CONDENSING UNIT ON ROOF. SIZE PER MANUFACTURERS RECOMMENDATIONS.
5. COMBINATION TEMPERATURE & HUMIDITY SENSOR.
6. EXHAUST DUCTS UP TO EXHAUST FAN ON ROOF. TRANSITION TO UNIT INLET.
7. ALL EXPOSED DUCTWORK SHALL BE DOUBLE WALLED (K-27) DUCT AS SPECIFIED. ALL DIMENSIONS SHOWN ARE CLEAR INNER DIMENSIONS.
8. SUPPLY & RETURN AIR DUCTS FROM ROOF TOP UNIT ON ROOF. TRANSITION TO UNIT INLET.
9. OUTSIDE AIR INTAKE DUCT UP TO INTAKE HOOD ON ROOF. TRANSITION TO UNIT INLET.
10. ROUTE 1"Ø CONDENSATE DRAIN LINE TO NEAREST FLOOR DRAIN OR LAVATORY P-TRAP AS SHOWN. REFER TO PLUMBING DRAWINGS FOR EXACT DRAIN LOCATION. ALL EXPOSED CONDENSATE DRAIN LINES SHALL BE PROVIDED WITH INSULATION AND ALUMINUM JACKETING.
11. 7"Ø EXHAUST VENT FROM DOMESTIC WATER HEATER UP THRU ROOF. REFER TO MANUFACTURER'S INSTALLATION INSTRUCTIONS. PROVIDE VENT CAP.
12. 4"Ø DRYER EXHAUST VENT UP THRU ROOF. PROVIDE VENT CAP.
13. 12"x12" INTAKE AIR LOUVER. REFER TO ARCHITECTURAL DRAWINGS AND SPECIFICATIONS.
14. CARBON MONOXIDE SENSOR (CO); VERIFY FINAL LOCATION WITH OWNER. REFER TO SEQUENCE OF OPERATIONS. THE SENSOR SHALL BE CALIBRATED EVERY EIGHTEEN MONTHS & A RECORD OF CALIBRATION SHALL BE POSTED IN A CONSPICUOUS PLACE.
15. 28" DIA. DOUBLE WALLED (K-27) DUCT FROM ROOF TOP UNIT ON ROOF. CONNECT TO 28" DIA. FABRIC DUCT AS SHOWN.
16. 16"x8" RETURN AIR OPENING IN WALL ABOVE CEILING.
17. 28"x12" COMBUSTION AIR LOUVER. REFER TO ARCHITECTURAL DRAWINGS AND SPECIFICATIONS. INSTALL LOUVER AT ELEVATION SUCH THAT TOP OF LOUVER SHALL BE WITHIN 12" OF BOTTOM OF ROOF.
18. INSTALL TWO (2) TYPE 'N' RETURN AIR GRILLES OF SIZE 30"x24" AT THE BOTTOM OF RETURN AIR DUCT.

PBK

ARCHITECT PBK Architects, Inc.
HOUSTON PBK.com
11 Greenway Plaza, 22nd Floor
Houston, TX 77046
713-965-0608 P
713-961-4571 F
TX Firm: BR 1608

CIVIL
DIG ENGINEERS
T 713 940 3238
STRUCTURAL
KUBALA ENGINEERS
T 800 248 3674
MEP/T
LEAF ENGINEERS
T 713 940 3300
FOOD SERVICE
FOODSERVICE DESIGN PROFESSIONALS
T 281 302 2323
BUILDING ENVELOPE
BEAM
T 713 940 3201

LEAF ENGINEERS

CLINE ELEMENTARY SCHOOL CAMPUS REPLACEMENT

1550 WEST BOULEVARD, FRIENDSWOOD, TX 77546

ISSUE FOR CSP

FRIENDSWOOD INDEPENDENT SCHOOL DISTRICT

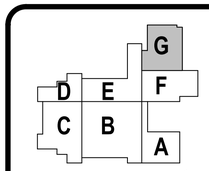

STATE OF TEXAS
MITAL J. PATEL
111622
LICENSED
PROFESSIONAL ENGINEER
DECEMBER 17, 2021
LEAF ENGINEERS
F-18672

CLIENT
FRIENDSWOOD ISD

DATE	PROJECT NUMBER
DECEMBER 17, 2021	20380

DRAWING HISTORY

No.	Description	Date
1	ADDENDUM 01	01/12/2022

ISSUE FOR CSP

MECHANICAL 1ST LEVEL - FLOOR PLAN - AREA G

M-101G

File Path: G:\Revit\MECH_20380_FISD CLINE ES_R21_harshal.a.mungikar.rvt

CHECKED BY:
Checker
DRAWN BY:
Author
Plot Stamp:
1/12/2022 2:51:50 AM

MECHANICAL ROOF PLAN
M-301
FOR BLUEBEAM LABELING/OCR:

0"
1"

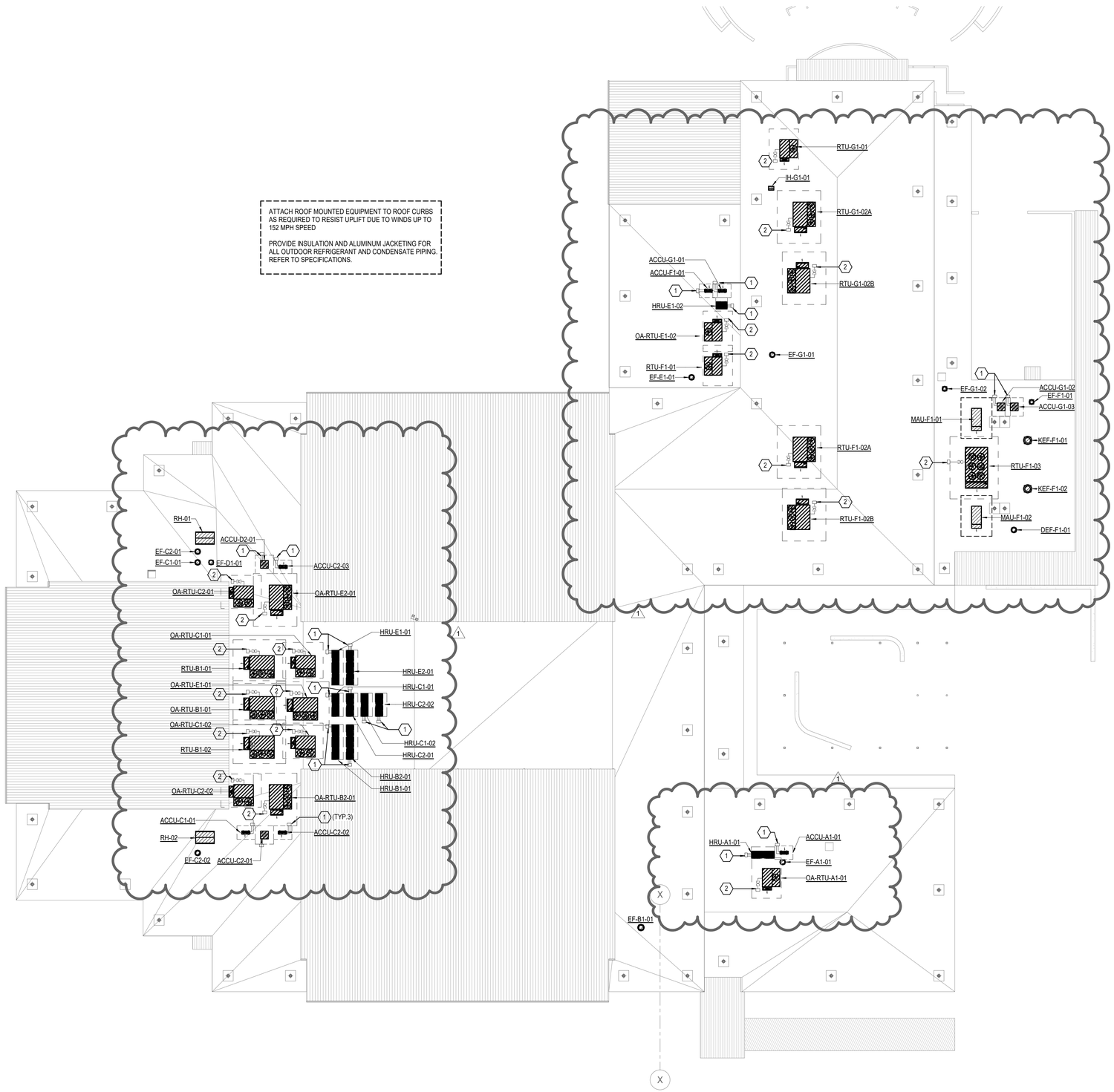

1 MECHANICAL ROOF PLAN
1" = 20'-0"

KEYED NOTES

1. REFRIGERANT PIPING FROM OUTDOOR UNIT TO INDOOR UNIT. SIZE PER MANUFACTURER'S RECOMMENDATIONS. PROVIDE PORTABLE PIPE SUPPORTS FOR REFRIGERANT PIPING IN MAX. HORIZONTAL SPACING OF 4'-0" INTERVALS. REFER TO DETAILS. ALL OUTDOOR REFRIGERANT PIPING SHALL BE PROVIDED WITH INSULATION AND ALUMINUM JACKETING. PROVIDE STAINLESS STEEL PIPE PENETRATION ROOF HOOD.
2. ROUTE 1"Ø CONDENSATE DRAIN LINE DOWN THRU ROOF. PROVIDE PORTABLE PIPE SUPPORTS FOR CONDENSATE PIPING IN MAX. HORIZONTAL SPACING OF 8'-0" INTERVALS. REFER TO DETAILS. ALL OUTDOOR CONDENSATE PIPING SHALL BE PROVIDED WITH INSULATION AND ALUMINUM JACKETING. PROVIDE STAINLESS STEEL PIPE PENETRATION ROOF HOOD.

1

PBK

ARCHITECT
PBK Architects, Inc.
PBK.com
HOUSTON
11 Greenway Plaza, 22nd Floor
Houston, TX 77046
713-965-0608 P
713-961-4571 F
TX Firm: BR 1608

CIVIL
DIG ENGINEERS
T 713 940 3238
STRUCTURAL
KUBALA ENGINEERS
T 800 248 3674
MEP/T
LEAF ENGINEERS
T 713 940 3300
FOOD SERVICE
FOODSERVICE DESIGN PROFESSIONALS
T 281 302 2323
BUILDING ENVELOPE
BEAM
T 713 940 3201

LEAF ENGINEERS

CLINE ELEMENTARY SCHOOL CAMPUS REPLACEMENT

1550 WEST BOULEVARD, FRIENDSWOOD, TX 77546

ISSUE FOR CSP

FRIENDSWOOD INDEPENDENT SCHOOL DISTRICT

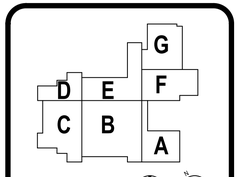

KEY PLAN
NORTH: PLAN TRUE

STATE OF TEXAS
MITAL J. PATEL
111622
LICENSED
PROFESSIONAL ENGINEER
DECEMBER 17, 2021
LEAF ENGINEERS
F-18672

CLIENT
FRIENDSWOOD ISD

DATE	PROJECT NUMBER
DECEMBER 17, 2021	20380

DRAWING HISTORY

No.	Description	Date
1	ADDENDUM 01	01/12/2022

ISSUE FOR CSP

MECHANICAL ROOF PLAN

M-301

File Path: G:\Revit\MECH_20380_FISD CLINE ES_R21_harshal.a.mungikar.rvt

CHECKED BY:
Checker
DRAWN BY:
Author
Plot Stamp:
1/12/2022 2:51:59 AM

MECHANICAL DETAILS
M-603
FOR BLUEBEAM LABELING/OCR:

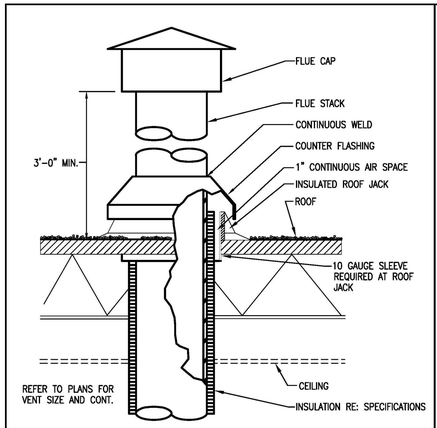

WATER HEATER VENT STACK DETAIL — 09
NOT TO SCALE

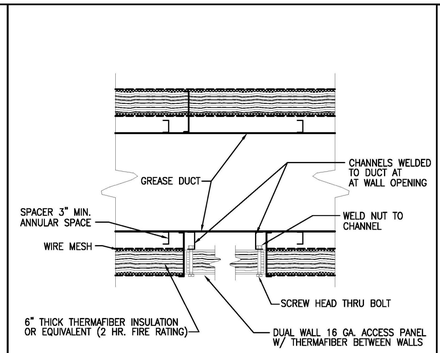

GREASE DUCT ACCESS PANEL DETAIL — 06
NOT TO SCALE

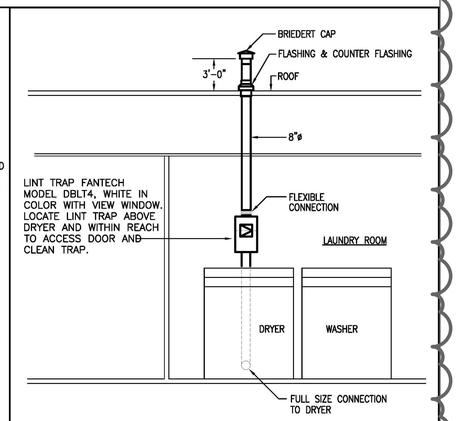

DRYER VENT DETAIL — 03
NOT TO SCALE

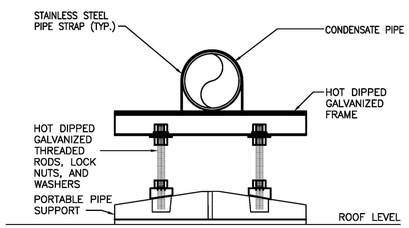

NOTES:
1. PORTABLE PIPE SUPPORTS SHALL BE MANUFACTURED BY ADVANCED SUPPORT PRODUCT, INC., MODEL SS1000A/SS2000-CB-ADJ (AS APPLICABLE) OR PRIOR APPROVED EQUAL.
2. ALL METALS MATERIALS SHALL BE HOT-DIPPED GALVANIZED.

CONDENSATE PIPE SUPPORT DETAIL — 12
NOT TO SCALE

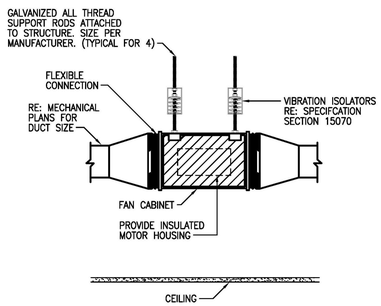

NOTE:
1. INSULATE FAN INTERIOR WITH 1" THICK 3.0 P.F.C. DENSITY ACOUSTICAL LINER WITH 100% ADHESIVE AND STICKPINS PER SMACNA. COAT AIR SIDE WITH FOSTER 40-20 ANTI-MICROBIAL COATING.
2. FAN SHALL INCLUDE (2) REMOVABLE ACCESS PANELS LOCATED PERPENDICULAR TO THE MOTOR MOUNTING PANEL. ACCESS PANELS MUST BE OF SUFFICIENT SIZE TO PERMIT EASY ACCESS TO ALL INTERIOR COMPONENTS.

IN-LINE EXHAUST FAN DETAIL — 10
NOT TO SCALE

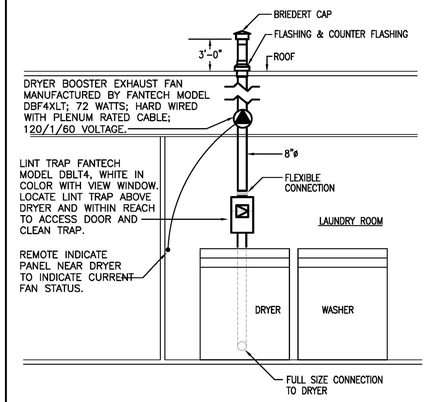

DRYER VENT DETAIL — 08
NOT TO SCALE

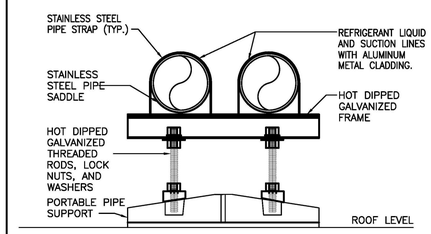

NOTES:
1. PORTABLE PIPE SUPPORTS SHALL BE MANUFACTURED BY ADVANCED SUPPORT PRODUCT, INC., MODEL SS1000A/SS2000-CB-ADJ (AS APPLICABLE) OR PRIOR APPROVED EQUAL.
2. ALL METALS MATERIALS SHALL BE HOT-DIPPED GALVANIZED.

ROOF MOUNTED PORTABLE REFRIGERANT PIPE SUPPORT DETAIL — 05
NOT TO SCALE

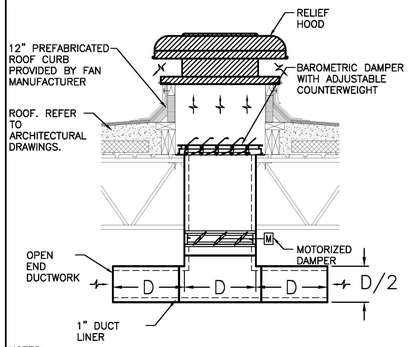

NOTES:
1. UNDER NO CIRCUMSTANCES SHOULD EQUIPMENT OF ANY KIND BE MOUNTED TO THE SIDE OF THE ROOF CURB.
2. FAN MANUFACTURER TO PROVIDE BAROMETRIC DAMPER AND ROOF CURB.
3. CONTROLS CONTRACTOR TO PROVIDE AND INSTALL CONTROL DAMPER WITH MOTORIZED DAMPER OPERATOR MOUNTED TO THE EXTERIOR OF DUCT.
4. MINIMUM DIMENSION OF CURB TO BE 12".

ROOF MOUNTED RELIEF HOOD DETAIL — 02
NOT TO SCALE

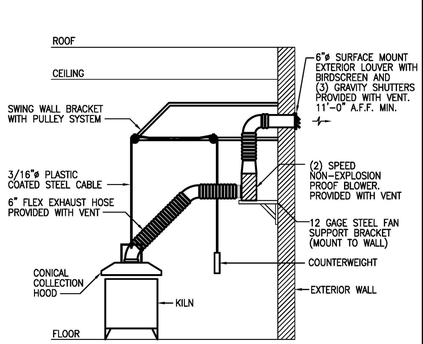

NOTES:
1. REFER TO ARCHITECTURAL SPECIFICATION SECTION 10100 "MISCELLANEOUS SPECIALTIES" FOR KILN MAKE, MODEL AND ELECTRICAL CHARACTERISTICS.
2. REFER TO MECHANICAL PLANS FOR MEANS OF EXHAUST THRU ROOF OR WALL.

KILN WITH HOOD EXTERIOR WALL DISCHARGE DETAIL — 11
NOT TO SCALE

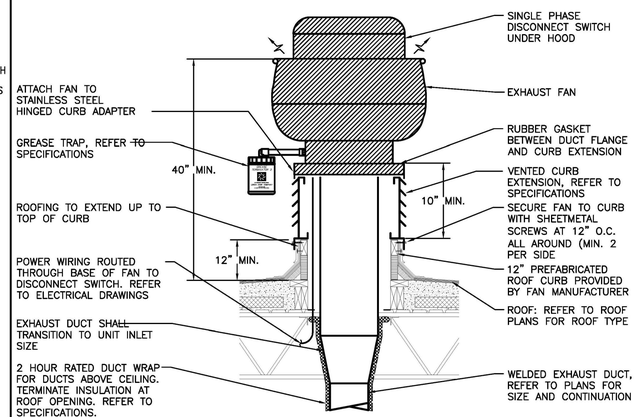

NOTES:
1. FOR THREE PHASE FANS, REFER TO THREE PHASE DISCONNECT SWITCH DETAIL.
2. REFER TO DIVISION 7 FOR ADDITIONAL ROOFING REQUIREMENTS.
3. ROOF CURB MUST BE COORDINATED WITH DIVISION 7 AND STRUCTURAL.
4. ATTACH ROOF MOUNTED EQUIPMENT TO ROOF CURB AS REQUIRED TO RESIST UPLIFT DUE TO WINDS UP TO 152 M.P.H. SPEED.

UPBLAST ROOF MOUNTED KITCHEN HOOD EXHAUST FAN DETAIL — 07
NOT TO SCALE

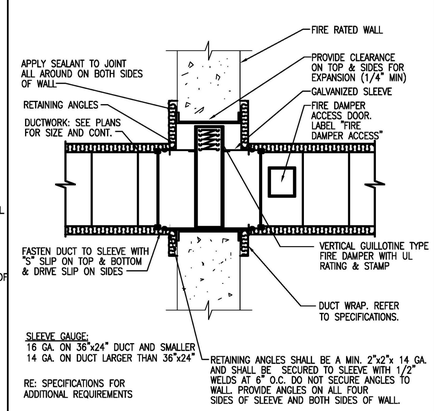

VERTICAL FIRE DAMPER DETAIL — 04
NOT TO SCALE

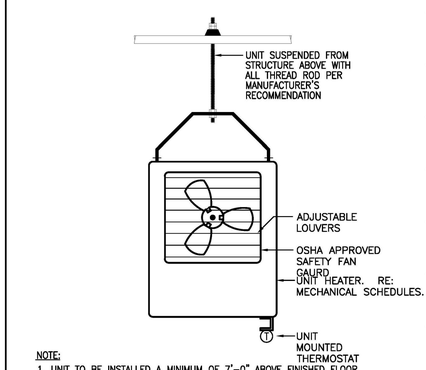

NOTE:
1. UNIT TO BE INSTALLED A MINIMUM OF 7'-0" ABOVE FINISHED FLOOR.
2. DO NOT ROUTE CONDUIT OR WIREING ABOVE UNIT HEATER.
3. REFER TO SPECIFICATION SECTION 15060 FOR HANGERS AND SUPPORTS.
4. REFER TO SPECIFICATION SECTION 15070 FOR VIBRATION CONTROL.

ELECTRIC UNIT HEATER DETAIL — 01
NOT TO SCALE

1 MECHANICAL DETAILS
SCALE: NONE

PBK

ARCHITECT PBK Architects, Inc.
HOUSTON PBK.com
11 Greenway Plaza, 22nd Floor
Houston, TX 77046
713-965-0608 P
713-961-4571 F
TX Firm: BR 1608

CIVIL
DIG ENGINEERS
T 713 940 3238
STRUCTURAL
KUBALA ENGINEERS
T 800 248 3674
MEP/T
LEAF ENGINEERS
T 713 940 3320
FOOD SERVICE
FOODSERVICE DESIGN PROFESSIONALS
T 281 302 2323
BUILDING ENVELOPE
BEAM
T 713 940 3201

CLINE ELEMENTARY SCHOOL CAMPUS REPLACEMENT

1550 WEST BOULEVARD, FRIENDSWOOD, TX 77546

ISSUE FOR CSP

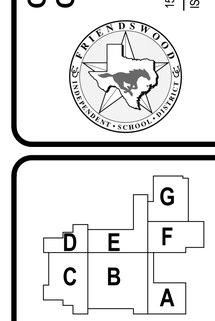

KEY PLAN
NORTH: PLAN TRUE

STATE OF TEXAS
MITAL J. PATEL
111622
LICENSED
PROFESSIONAL ENGINEER
DECEMBER 17, 2021
LEAF ENGINEERS
F-18672

CLIENT
FRIENDSWOOD ISD

DATE	PROJECT NUMBER
DECEMBER 17, 2021	20380

DRAWING HISTORY

No.	Description	Date
1	ADDENDUM 01	01/12/2022

ISSUE FOR CSP

MECHANICAL DETAILS

M-603

File Path: G:\Revit\MECH_20380_FISD CLINE ES_R21_harshal.a.mungkar.rvt
CHECKED BY: Checker
DRAWN BY: Author
Plot Stamp: 1/12/2022 9:41:00 AM

ELECTRICAL SITE PLAN - COMPOSITE

ES101

FOR BLUEBEAM LABELING/OCR:

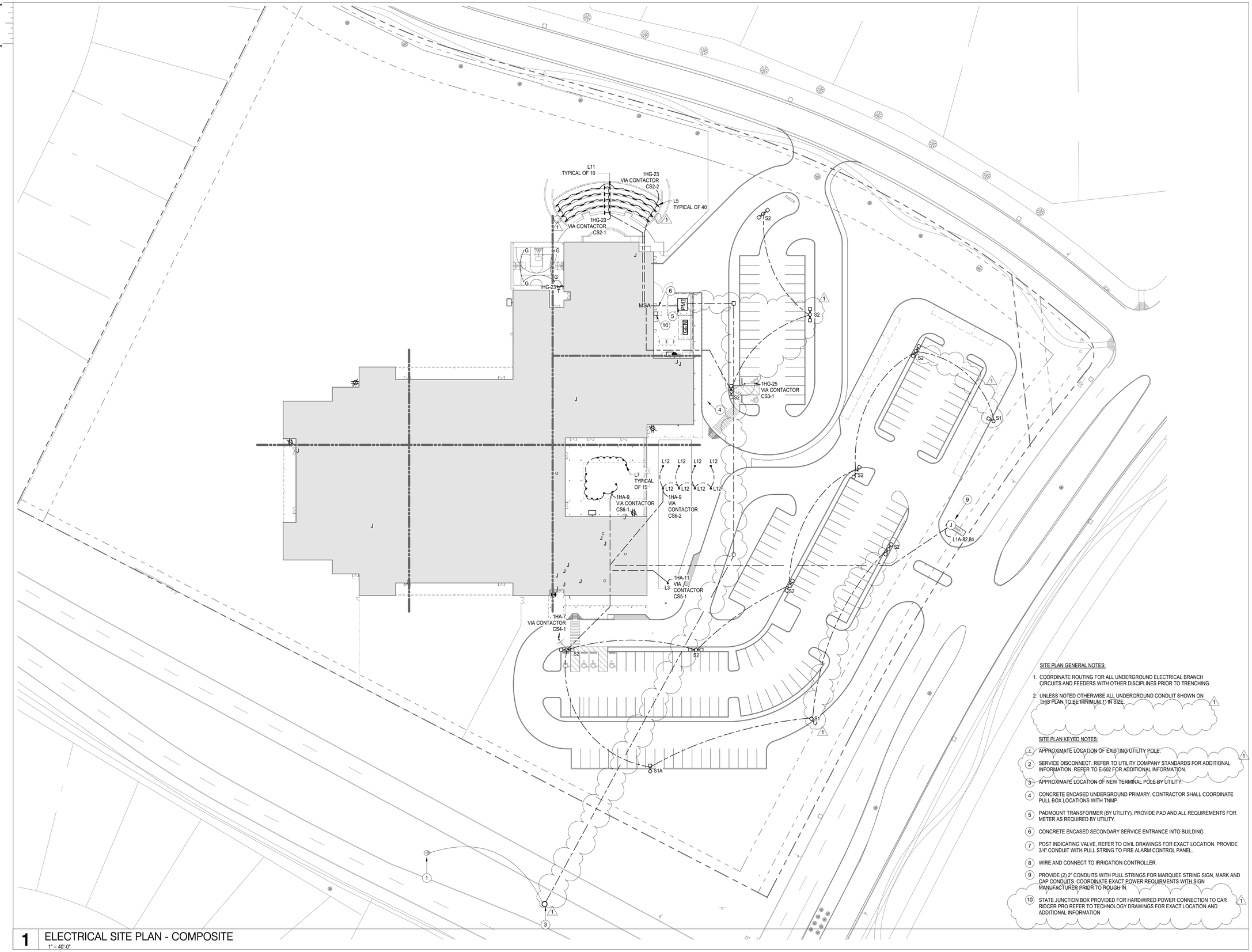

SITE PLAN GENERAL NOTES:

1. COORDINATE ROUTING FOR ALL UNDERGROUND ELECTRICAL BRANCH CIRCUITS AND FEEDERS WITH OTHER DISCIPLINES PRIOR TO TRENCHING.
2. UNLESS NOTED OTHERWISE ALL UNDERGROUND CONDUIT SHOWN ON THIS PLAN TO BE MINIMUM 1" IN SIZE.

SITE PLAN KEYED NOTES:

1. APPROXIMATE LOCATION OF EXISTING UTILITY POLE.
2. SERVICE DISCONNECT. REFER TO UTILITY COMPANY STANDARDS FOR ADDITIONAL INFORMATION. REFER TO E-502 FOR ADDITIONAL INFORMATION.
3. APPROXIMATE LOCATION OF NEW TERMINAL POLE BY UTILITY.
4. CONCRETE ENCASED UNDERGROUND PRIMARY. CONTRACTOR SHALL COORDINATE PULL BOX LOCATIONS WITH TNMP.
5. PADMOUNT TRANSFORMER (BY UTILITY). PROVIDE PAD AND ALL REQUIREMENTS FOR METER AS REQUIRED BY UTILITY.
6. CONCRETE ENCASED SECONDARY SERVICE ENTRANCE INTO BUILDING.
7. POST INDICATING VALVE. REFER TO CIVIL DRAWINGS FOR EXACT LOCATION. PROVIDE 3/4" CONDUIT WITH PULL STRING TO FIRE ALARM CONTROL PANEL.
8. WIRE AND CONNECT TO IRRIGATION CONTROLLER.
9. PROVIDE (2) 2" CONDUITS WITH PULL STRINGS FOR MARQUEE STRING SIGN, MARK AND CAP CONDUITS. COORDINATE EXACT POWER REQUIRMENTS WITH SIGN MANUFACTURER PRIOR TO ROUGH IN.
10. STATE JUNCTION BOX PROVIDED FOR HARDWIRED POWER CONNECTION TO CAR RIDCER PRO REFER TO TECHNOLOGY DRAWINGS FOR EXACT LOCATION AND ADDITIONAL INFORMATION

1 ELECTRICAL SITE PLAN - COMPOSITE
1" = 40'-0"

File Path: C:\Users\ELaCour\Documents\ELEC_20380_FISD CLINE ES_R21_ELaCour.rvt

CHECKED BY:
Checker
DRAWN BY:
Author
Plot Stamp:
1/11/2022 5:31:17 PM

PBK

ARCHITECT PBK Architects, Inc.
PBK.com
HOUSTON
11 Greenway Plaza, 22nd Floor
Houston, TX 77046
713-965-0608 P
713-961-4571 F
TX Firm: BR 1608

CIVIL
DIG ENGINEERS
T 713 940 3238
STRUCTURAL
KUBALA ENGINEERS
T 800 248 3674
MEPT
LEAF ENGINEERS
T 713 940 3300
FOOD SERVICE
FOODSERVICE DESIGN PROFESSIONALS
T 281 350 2323
BUILDING ENVELOPE
BEAM
T 713 940 3201

LEAF ENGINEERS

CLINE ELEMENTARY SCHOOL
CAMPUS REPLACEMENT

1550 WEST BOULEVARD, FRIENDSWOOD, TX 77546

ISSUE FOR CSP

FRIENDSWOOD INDEPENDENT SCHOOL DISTRICT

KEY PLAN

G D E F C B A

NORTH: PLAN TRUE

STATE OF TEXAS
MATTHEW R. SICKORE
107736
LICENSED
PROFESSIONAL ENGINEER

DECEMBER 17, 2021
LEAF ENGINEERS
F-18672

CLIENT
FRIENDSWOOD ISD

DATE	PROJECT NUMBER
DECEMBER 17, 2021	20380

DRAWING HISTORY

No.	Description	Date
1	ADDENDUM 01	01/11/22

ISSUE FOR CSP

ELECTRICAL SITE PLAN - COMPOSITE

ES101

ENLARGED ELECTRICAL KITCHEN PLAN

E-401

FOR BLUEBEAM LABELING/OCR:

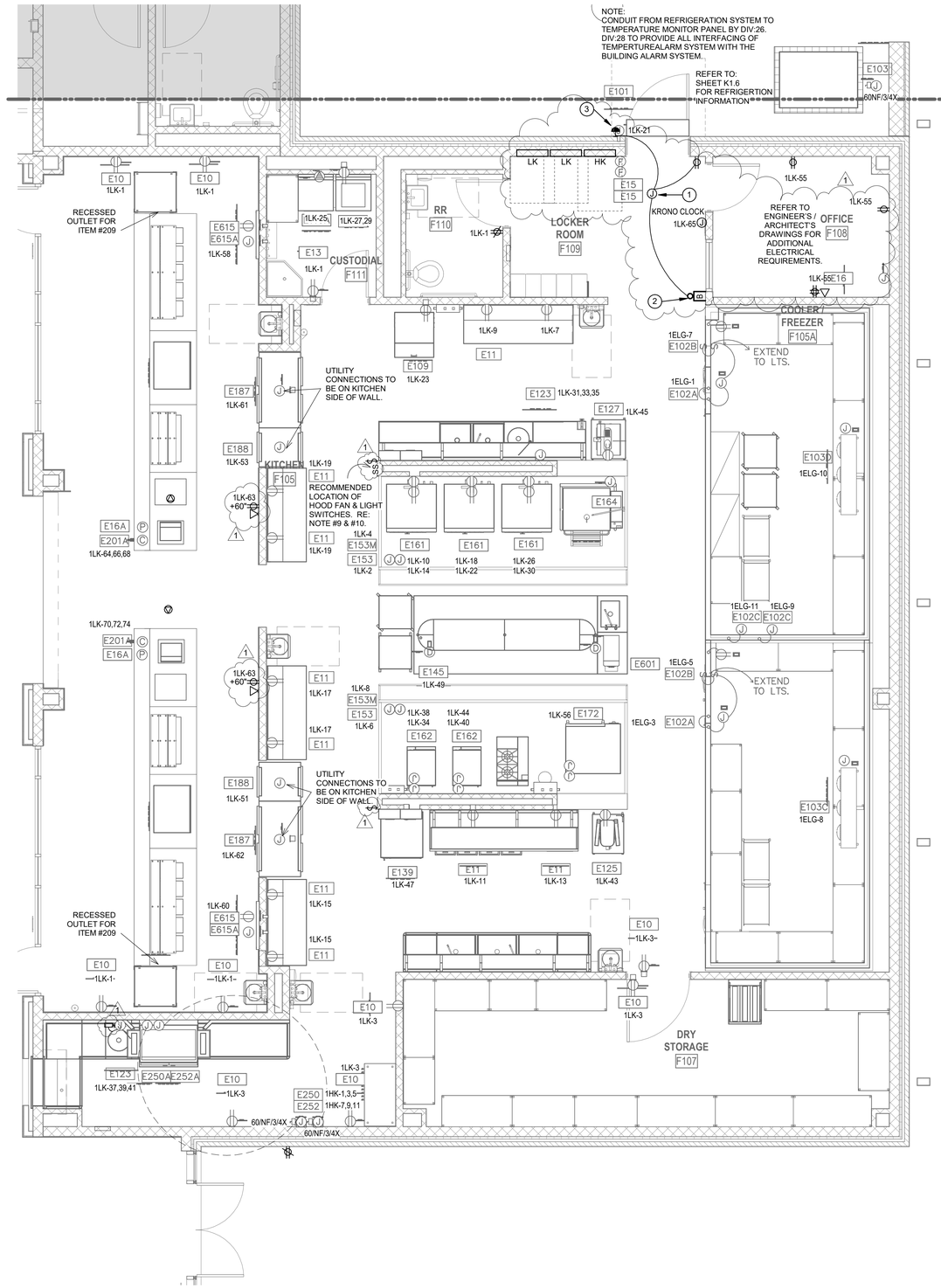

1 1ST LEVEL - POWER PLAN - KITCHEN

1/4" = 1'-0"

ELECTRICAL KITCHEN GENERAL NOTES

1. REFER TO FOOD SERVICE DRAWING(S) FOR EQUIOPMENT AND ELECTRICAL ROUGH-IN LOCATION. COORDINATE WITH FOOD SERVICE EQUIPMENT SUPPLIER'S APPROVED SHOP DRQING(S) FOR EXACT EQIPMENT CHARCTERISTICS (VOLTAGE/AMPERE RATING AND PHASE) AND ELECTRICAL CONNECTION REQUIREMENTS RECEPTACLE, JUNCTION BOX, SWITCH, ETC.) PRIOR TO DIVISION 26 ROGH-IN.
2. PROVIDE ALL CONNECTIONS TO KITCHEN VENTILATION AND SUPPLY UNIT CONTEROL PANEL AS REQUIRED FOR LOCAL CONTROL OF HOOD LIGHTS, SUPPLY AND EXHAUST FANS. COORDINATE BACK BOX REQUIRMENTS FOR CONTROL PANEL WITH KITCHEN VENTILATION AND SUPPLY UNIT INSTALLER PRIOR TO ELCTRICAL ROUGH IN.
3. PROVIDE ALL RACEWAY AND CONTROL WIRING BETWEEN FIRE SUPPRESION SYSTEM CONTROL PANEL AND ELECTRICAL SOURCE PANEL AS REQUIRED FOR CONNECTION OF SHUNT TRIP COILS FOR ALL OVER CURRENT DEVICES SERVING COOKING EQUIPMENT BENEATH HOOD. PROVIDE CONNECTION TO GAS SHUT-OFF VALVE(S) SERVING COOKING EQUIPMENT BENEATH HOOD.
4. PROVIDE RACEWAY SEALS FOR ALL COOLER/FREEZER CONDUIT PENETRATION(S) PER BEC 300-5 (g) AND 300-7 (a). REFER TO DETAIL ON FOOD SERVICE DETAILS.
5. PROVIDE GREEN GROUNDING CONDUCTOR IN EACH KITCHEN BRANCH CIRCUIT.
6. PROVIDE SWITCH FOE LOCAL CONTROL OF EXHAUST HOOD FAN. PROVIDE ALL WIRING AS REQUIRED TO CONTROL FAN STATER FROM SWITCH LOCATION. EXHAUST AND MAKE-UP AIR FABS TI VE UBTERLOCKED.
7. (1) ENGRAVE COVERPLATE "HOOD EXHAUST".
7. ACCESSORIES AND FITTINGS PROVIDED LOOSE WITH FOODSERVICE EQUIPMENT BY DIVSION 11. FIELD INSTALLED BY DIVISON 26.
8. PROVIDE PILOT LIGHT SWITCH FOR LOCAL CONTROL O FHOOD LIGHTS. PROVIDE ALL WIRING AS REQUIRED TO CONTROL HOOD LIGHTS FORM SWITCH LOCAITON. ENGRAVE COVERPLATE "HOOD LIGHTS".
9. ALL 120V, SINGLE PHASE 15-20 AMP RECEPTACLE INSTALLED IN KITCHEN AREA SHALL HAVE GFCI PROTECTION PER NEC ARTICLE 21.8(B)(3)
10. REFER TO FOODSERVICE EQUIPMENT PLANS FOR ADDITIONAL INFORMATION AND REQUIREMENTS OF THE ELECTRICAL CONTRACTOR. COORDINATE ALL FINAL LOCATIONS OF EQUIPMENT AND SERVICE TO EQUIPMENT (RECEPTACLE, DISCONNECT, ETC) WITH APPROVED FOODSERVICE SHOP DRAWINGS PRIOR TO ROUGH IN.

ELECTRICAL KITCHEN GENERAL NOTES

1. PROVIDE EDWARDS 88 SERVICES OR APPROVED EQUAL 120/24 VOLT, 20AMPERE TRANSFORMER ABOVE ACCESSIVLE CEILING TO SERVE DOOR BELL. PROVIDE ALL CONNECTIONS TO PUSHBUTTON TRANSFORMER AND DOOR VELL AS REQUIRED FOR DOOR BELL SYSTEM OPERATION. 120 VOLT (INPUT POWER) BRANCH CIRCUIT AS SHOWN ON PLAN.
2. PROVIDE EDWARDS 340 SERIES OR APPROVED EQUAL 4" VIBRATING TYPE DOOR BELL.
3. PROVIDE EDWARDS 603 SERIES OR APPROVED EQUAL LOW VOLTAGE ILLUMINATED BRASS PUSH BUTTON.

FOODSERVICE ELECTRICAL SCHEDULE

FDP ENO	FDP ECONN	FDP ELOAD	FDP EVOLT	FDP EPH	FDP ESERVICE TO	FDP ELOC	FDP EAFF
E10	DR	16.0A	120	1	CONVENIENCE OUTLET	WALL	24"
E11	DR	16.0A	120	1		WALL	47"
E13	WPR	16.0A	120	1	CONVENIENCE OUTLET	WALL	48"
E15	JB	---	---	--	REMOTE FIRE PULL	WALL	48"
E16	JB	---	---	--	POS SYSTEM	VERIFY	VERIFY
E16A	CS	---	---	-	POS	WALL	6"
E101	JB	5.1A	120	1	AIR SCREEN	WALL	82"
E102A	JB	16.0A	120	1	DOOR HEATER/LIGHTS	CLG	DFA
E102B	DR	5.0A	120	1	TEMP. ALARM	CLG	DFA
E102C	JB	5.0A	120	1	PRESSURE RELIEF PORT	CLG	DFA
E103	JB/DS	30.4A	208	3	REFRIGERATION SYSTEM	VERIFY	VERIFY
E103C	JB	13.7A	208	1	FREEZER COIL	CLG	DFA
E103D	JB	2.7A	120	1	COOLER COIL	CLG	DFA
E109	DR	16.0A	120	1	ICE MACHINE	WALL	60"
E110	DR	16.0A	120	1	CLOTHES WASHER	WALL	48"
E110A	DR	30.0A	208	1	CLOTHES DRYER	WALL	48"
E123	JB	3.0HP	208	3	DISPOSER	WALL	24"
E125	DR	8.0A	120	1	20QT. MIXER	WALL	24"
E127	DR	5.6A	120	1	SLICER	WALL	24"
E139	SR	16.6A	120	1	MOBILE HEATED CABINET	WALL	47"
E145	DCR	16.0A	120	1	TABLE RECEPTACLE	CLG	84"
E153	JB	10.0A	120	1	HOOD LIGHTS	CLG	DFA
E153M	JB	10.0A	120	1	HEAT SENSOR	CLG	DFA
E161	(2)DR	6.0A EA.	120	1	CONVECTION OVEN	WALL	24"/48"
E162	(2) JB	15.0A EA.	120	1	CONVECTION STEAMER	WALL	24" / 60"
E164	JB	5.0A	120	1	TILT BRAISING PAN	WALL	24"
E172	(2)JB	15.0A EA.	208	1	COMBI OVEN	WALL	24"/48"
E187	JB	15.5A	120/208	1	HEATED CABINET	WALL	96"
E188	JB	7.2A	120	1	REFRIGERATOR	WALL	96"
E201A	CS	80.0A	208	3	UDS WALL	FLOOR	6"
E250	JB/DS	27.9A	480	3	DISHMACHINE	WALL	54"
E250A	JB	---	---	---	DISHMACHINE	WALL	66"
E252	JB/DS	43.4A	480	3	BOOSTER HEATER	WALL	54"
E252A	JB	---	---	---	BOOSTER HEATER	WALL	24"
E601	DCR	24.0A	208	1	HOT WATER DISPENSER	CLG	84"
E615	DR	5.0A	120	1	VIDEO/DATA SYSTEM	CLG	VERIFY
E615A	JB	---	---	---	VIDEO / DATA SYSTEM	CLG	VERIFY

PBK

ARCHITECT PBK Architects, Inc.
HOUSTON PBK.com
11 Greenway Plaza, 2nd Floor
Houston, TX 77046
713-965-0608 P
713-961-4571 F
TX Firm: BR 1608

CIVIL
DIG ENGINEERS
T 713 940 3238
STRUCTURAL
KUBALA ENGINEERS
T 800 248 3674
MEP/T
LEAF ENGINEERS
T 713 940 3300
FOOD SERVICE
FOODSERVICE DESIGN PROFESSIONALS
T 281 360 2323
BUILDING ENVELOPE
BEAM
T 713 940 3201

LEAF ENGINEERS

CLINE ELEMENTARY SCHOOL
CAMPUS REPLACEMENT

1550 WEST BOULEVARD, FRIENDSWOOD, TX 77546

ISSUE FOR CSP

FRIENDSWOOD INDEPENDENT SCHOOL DISTRICT

KEY PLAN

G F D E C B A

NORTH: PLAN TRUE

STATE OF TEXAS
MATTHEW R. SICKOREZ
107736
LICENSED
PROFESSIONAL ENGINEER

DECEMBER 17, 2021
LEAF ENGINEERS
F-18672

CLIENT
FRIENDSWOOD ISD

DATE	PROJECT NUMBER
DECEMBER 17, 2021	20380

DRAWING HISTORY

No.	Description	Date
1	ADDENDUM 01	01/11/22

ISSUE FOR CSP

ENLARGED ELECTRICAL KITCHEN PLAN

E-401

File Path: C:\Users\ELaCour\Documents\ELEC_20380_FISD CLINE ES_R21_ELaCour.rvt

CHECKED BY: Checker
DRAWN BY: Author
Plot Stamp: 1/11/2022 5:31:07 PM

PLUMBING-2ND LEVEL - FLOOR PLAN - AREA B

P-102B

FOR BLUEBEAM LABELING/OCR:

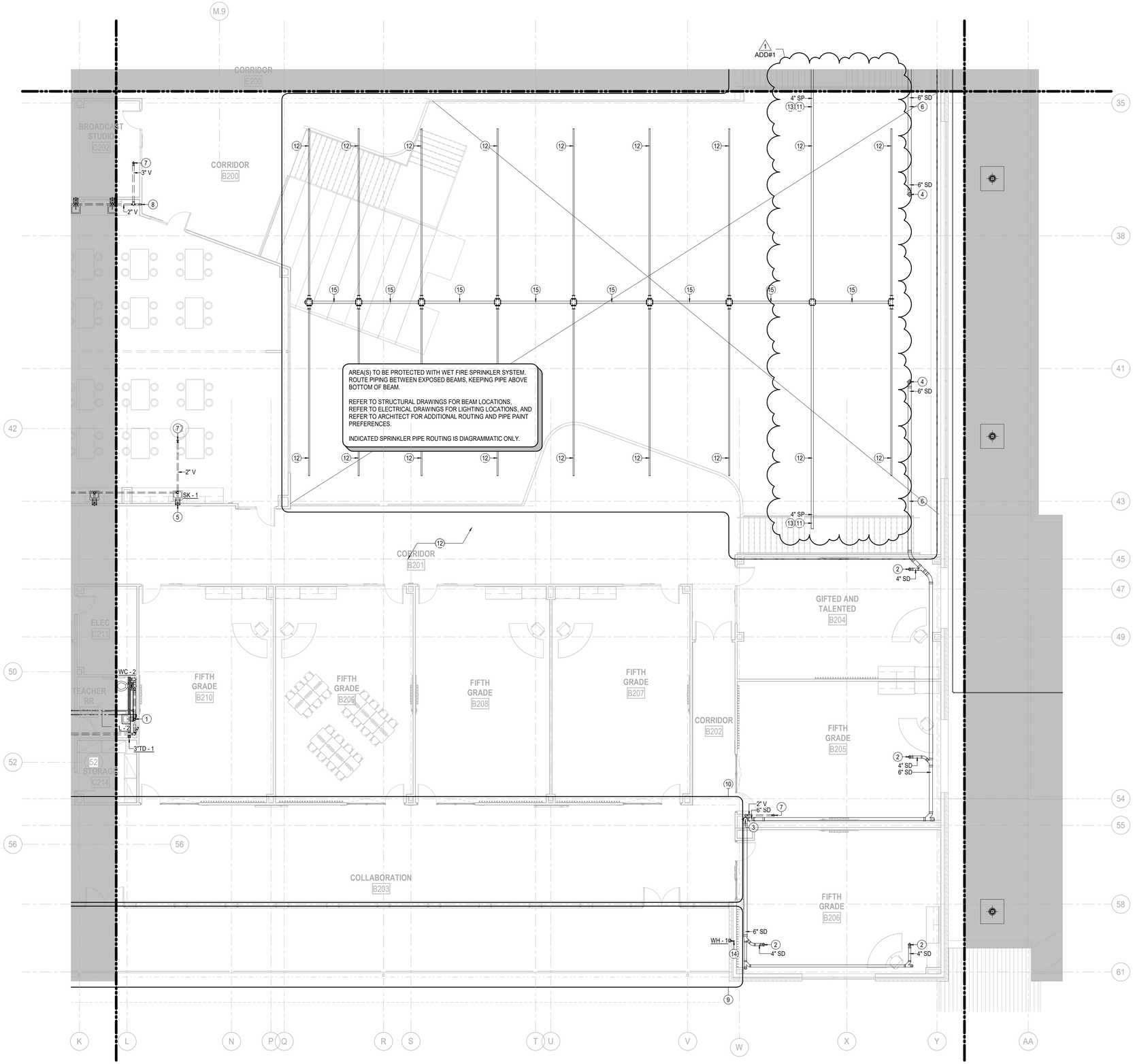

1 PLUMBING-2ND LEVEL - FLOOR PLAN - AREA B

1/8" = 1'-0"

GENERAL NOTES - PLUMBING PLAN

A. THE CONTRACTOR SHALL COMPLY WITH ALL AUTHORITIES HAVING JURISDICTION.

B. ALL FINAL CONNECTIONS TO FIXTURES AND EQUIPMENT SHALL BE MADE BY THE PLUMBING CONTRACTOR.

C. ALL PLUMBING PIPING SHALL BE COORDINATED WITH ALL OTHER TRADES PRIOR TO ANY INSTALLATION OF ALL PLUMBING FIXTURES AND EQUIPMENT BY THE PLUMBING CONTRACTOR.

D. ALL FLOOR DRAINS AND FLOOR SINKS SHOWN ON THIS DRAWING SHALL BE COORDINATED WITH ALL OTHER TRADES PRIOR TO INSTALLATION.

E. REFER TO ARCHITECTURAL DRAWING FOR EXACT LOCATIONS OF FIXTURES, EQUIPMENT, ETC. DO NOT SCALE FROM PLUMBING DRAWINGS.

F. ALL WALL CLEAN-OUTS SHALL BE ACCESSIBLE BY AN ACCESS PANEL.

G. PROVIDE AND INSTALL A DOUBLE EXTERIOR CLEAN-OUT (DFCO) ON ALL SANITARY LINES EXITING THE BUILDING.

H. ALL FLOOR DRAINS AND FLOOR SINKS SHALL BE PROVIDED WITH A TRAP PRIMER AND INSTALLED BY THE PLUMBING CONTRACTOR.

I. FIXTURES DESIGNATED AS ADA ACCESSIBLE BY ARCHITECT SHALL BE INSTALLED AT ADA ACCESSIBLE HEIGHT PER ARCHITECTURAL DETAILS.

J. ALL DOMESTIC COLD AND HOT WATER TAKE-OFFS SHALL HAVE AN ISOLATION SHUT-OFF VALVE.

K. FLOOR DRAINS AND FLOOR SINKS IN MECHANICAL ROOMS SHALL BE SET NOT LESS THAN 6" FROM HOUSEKEEPING PADS. RE: MECHANICAL DRAWINGS. DO NOT PLACE ON, OR IN, HOUSEKEEPING PAD, OR UNDERNEATH EQUIPMENT.

L. CONTRACTOR SHALL DEWATER ANY AREA AT OR BELOW GRADE PRIOR TO SETTING EQUIPMENT.

M. CONTRACTOR SHALL PROVIDE AND INSTALL A TRAP PRIMER, TP-1, AND A HOSE BIBB, HB-3, IN ALL MECHANICAL ROOMS.

N. CONTRACTOR SHALL PROVIDE AND INSTALL A HOSE BIBB WITH WHEEL HANDLE IN ALL MECHANICAL ROOMS, HB-3.

O. ANY AND ALL WATER PIPING EXPOSED TO OUTSIDE ELEMENTS SHALL BE INSULATED AND HEAT TRACED TO PREVENT FREEZING.

P. ALL SANITARY 3" OR ABOVE SHALL BE INSPECTED BY A CAMERA PRIOR TO SUBSTANTIAL COMPLETION.

KEYNOTES - PLUMBING PLAN

1 4" WASTE DOWN.

2 4" STORM PIPE DOWN FROM ROOF DRAIN.

3 8" STORM PIPE DOWN.

4 6" STORM PIPE DOWN FROM ROOF DRAIN.

5 3/4" HOT AND COLD WATER FROM BELOW.

6 COORDINATE PIPE ROUTING WITH STRUCTURE AS REQUIRED.

7 3" VENT THRU ROOF.

8 2" VENT UP FROM BELOW.

9 AREA(S) TO BE PROTECTED WITH DRY FIRE SPRINKLER SYSTEM. ROUTE PIPING BETWEEN EXPOSED BEAMS AS HIGH AS POSSIBLE, KEEPING PIPE ABOVE BOTTOM OF BEAM. REFER TO STRUCTURAL DRAWINGS FOR BEAM LOCATIONS AND REFER TO ARCHITECT FOR ADDITIONAL ROUTING AND PIPE PAINT PREFERENCES.

10 AREA(S) TO BE PROTECTED WITH WET FIRE SPRINKLER SYSTEM. ROUTE PIPING BETWEEN EXPOSED BEAMS AS HIGH AS POSSIBLE, KEEPING PIPE ABOVE BOTTOM OF BEAM. REFER TO STRUCTURAL DRAWINGS FOR BEAM LOCATIONS AND REFER TO ARCHITECT FOR ADDITIONAL ROUTING AND PIPE PAINT PREFERENCES.

11 SPRINKLER PIPING CONCEALED ABOVE CEILING. COORDINATE PIPE ROUTING WITH STRUCTURE AS REQUIRED, RE: STRUCTURAL DRAWINGS.

12 ROUTE SPRINKLER BRANCH PIPE AS HIGH AS POSSIBLE TO BOTTOM OF DECK AND BETWEEN BEAMS. COORDINATE PIPE ROUTING WITH STRUCTURE AS REQUIRED, RE: STRUCTURAL DRAWINGS. REFER TO ARCHITECT FOR ADDITIONAL ROUTING AND PIPE PAINT PREFERENCES.

13 TO FIRE SPRINKLER SYSTEM.

14 3/4" COLD WATER UP FROM BELOW TO SERVE WALL HYDRANT.

15 ROUTE SPRINKLER MAIN PIPE AS HIGH AS POSSIBLE TO BOTTOM OF DECK AND PENETRATING THROUGH BEAMS. COORDINATE PIPE ROUTING WITH STRUCTURE AS REQUIRED, RE: STRUCTURAL DRAWINGS. REFER TO ARCHITECT FOR ADDITIONAL ROUTING AND PIPE PAINT PREFERENCES.

PBK

ARCHITECT PBK Architects, Inc.
HOUSTON PBK.com
11 Greenway Plaza, 22nd Floor
Houston, TX 77046
713-965-0608 P
713-961-4571 F
TX Firm: BR 1608

CIVIL
DIG ENGINEERS
T 713 940 3238
STRUCTURAL
KUBALA ENGINEERS
T 800 248 3674
MEP/T
LEAF ENGINEERS
T 713 940 3300
FOOD SERVICE
FOODSERVICE DESIGN PROFESSIONALS
T 281 302 2323
BUILDING ENVELOPE
BEAM
T 713 940 3201

LEAF ENGINEERS

CLINE ELEMENTARY SCHOOL CAMPUS REPLACEMENT

1550 WEST BOULEVARD, FRIENDSWOOD, TX 77546

ISSUE FOR CSP

FRIENDSWOOD INDEPENDENT SCHOOL DISTRICT

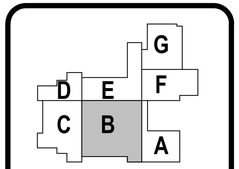

KEY PLAN

NORTH: PLAN TRUE

STATE OF TEXAS
DONALD C. RICHARDS
61525
LICENSED PROFESSIONAL ENGINEER

DECEMBER 17, 2021
LEAF ENGINEERS
F-18672

CLIENT
FRIENDSWOOD ISD

DATE	PROJECT NUMBER
DECEMBER 17, 2021	20380

DRAWING HISTORY

No.	Description	Date
1	ADDENDUM #1	01/12/2022

ISSUE FOR CSP

PLUMBING-2ND LEVEL - FLOOR PLAN - AREA B

P-102B

File Path: C:\Users\scargo\Documents\PLUM_20380_FISD CLINE ES_R21_scargo.rvt

CHECKED BY:
Checker
DRAWN BY:
Author
Plot Stamp:
1/11/2022 10:46:49 AM

PLUMBING-2ND LEVEL - FLOOR PLAN - AREA E

P-102E

FOR BLUEBEAM LABELING/OCR:

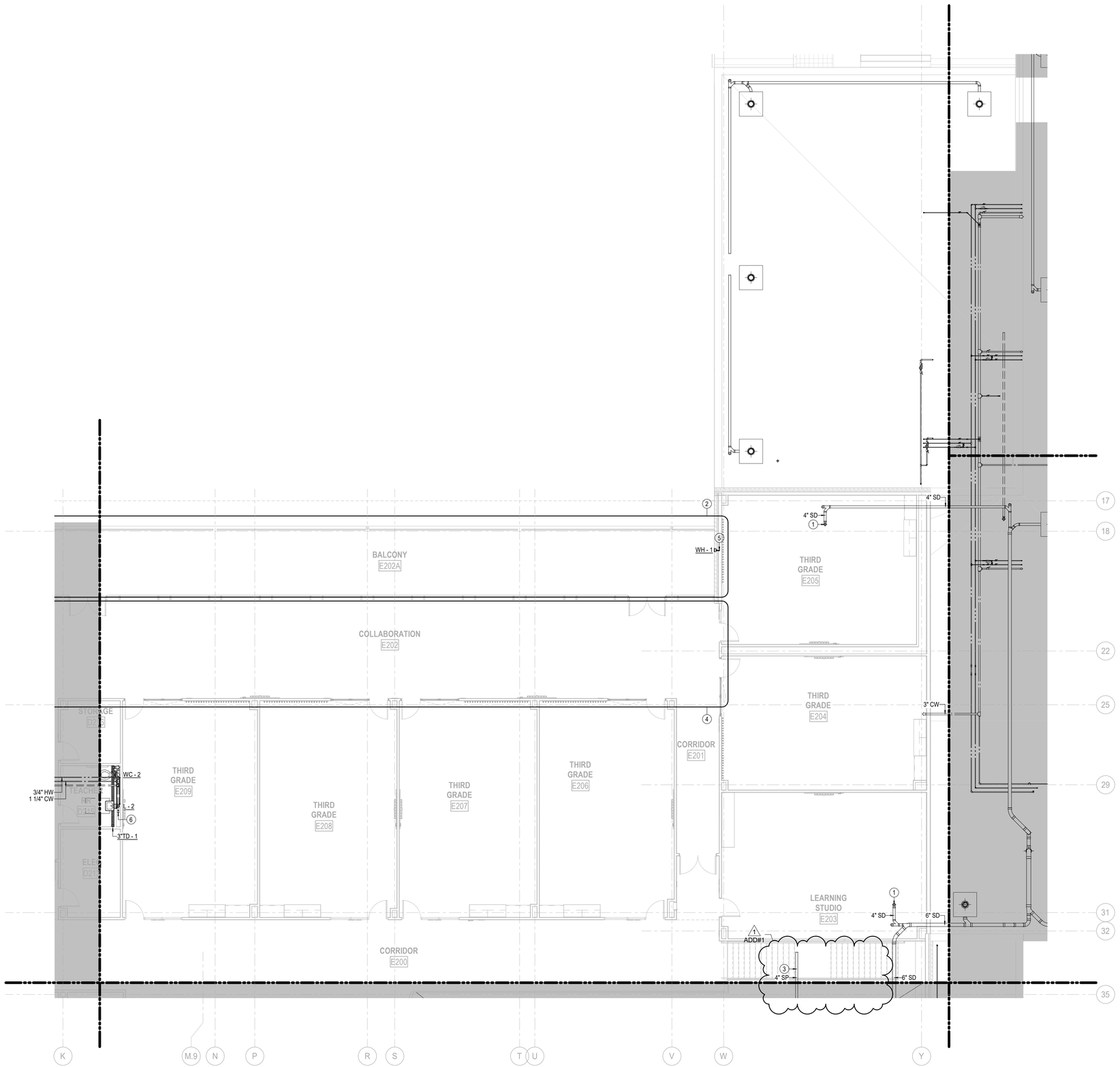

1 PLUMBING-2ND LEVEL - FLOOR PLAN - AREA E

1/8" = 1'-0"

GENERAL NOTES - PLUMBING PLAN

A. THE CONTRACTOR SHALL COMPLY WITH ALL AUTHORITIES HAVING JURISDICTION.

B. ALL FINAL CONNECTIONS TO FIXTURES AND EQUIPMENT SHALL BE MADE BY THE PLUMBING CONTRACTOR.

C. ALL PLUMBING PIPING SHALL BE COORDINATED WITH ALL OTHER TRADES PRIOR TO ANY INSTALLATION OF ALL PLUMBING FIXTURES AND EQUIPMENT BY THE PLUMBING CONTRACTOR.

D. ALL FLOOR DRAINS AND FLOOR SINKS SHOWN ON THIS DRAWING SHALL BE COORDINATED WITH ALL OTHER TRADES PRIOR TO INSTALLATION.

E. REFER TO ARCHITECTURAL DRAWING FOR EXACT LOCATIONS OF FIXTURES, EQUIPMENT, ETC. DO NOT SCALE FROM PLUMBING DRAWINGS.

F. ALL WALL CLEAN-OUTS SHALL BE ACCESSIBLE BY AN ACCESS PANEL.

G. PROVIDE AND INSTALL A DOUBLE EXTERIOR CLEAN-OUT (DFCO) ON ALL SANITARY LINES EXITING THE BUILDING.

H. ALL FLOOR DRAINS AND FLOOR SINKS SHALL BE PROVIDED WITH A TRAP PRIMER AND INSTALLED BY THE PLUMBING CONTRACTOR.

I. FIXTURES DESIGNATED AS ADA ACCESSIBLE BY ARCHITECT SHALL BE INSTALLED AT ADA ACCESSIBLE HEIGHT PER ARCHITECTURAL DETAILS.

J. ALL DOMESTIC COLD AND HOT WATER TAKE-OFFS SHALL HAVE AN ISOLATION SHUT-OFF VALVE.

K. FLOOR DRAINS AND FLOOR SINKS IN MECHANICAL ROOMS SHALL BE SET NOT LESS THAN 6" FROM HOUSEKEEPING PADS. RE: MECHANICAL DRAWINGS. DO NOT PLACE ON, OR IN, HOUSEKEEPING PAD, OR UNDERNEATH EQUIPMENT.

L. CONTRACTOR SHALL DEWATER ANY AREA AT OR BELOW GRADE PRIOR TO SETTING EQUIPMENT.

M. CONTRACTOR SHALL PROVIDE AND INSTALL A TRAP PRIMER, TP-1, AND A HOSE BIBB, HB-3, IN ALL MECHANICAL ROOMS.

N. CONTRACTOR SHALL PROVIDE AND INSTALL A HOSE BIBB WITH WHEEL HANDLE IN ALL MECHANICAL ROOMS, HB-3.

O. ANY AND ALL WATER PIPING EXPOSED TO OUTSIDE ELEMENTS SHALL BE INSULATED AND HEAT TRACED TO PREVENT FREEZING.

P. ALL SANITARY 3" OR ABOVE SHALL BE INSPECTED BY A CAMERA PRIOR TO SUBSTANTIAL COMPLETION.

KEYNOTES - PLUMBING PLAN

1 4" STORM PIPE DOWN FROM ROOF DRAIN.

2 AREA(S) TO BE PROTECTED WITH DRY FIRE SPRINKLER SYSTEM. ROUTE PIPING BETWEEN EXPOSED BEAMS AS HIGH AS POSSIBLE, KEEPING PIPE ABOVE BOTTOM OF BEAM. REFER TO STRUCTURAL DRAWINGS FOR BEAM LOCATIONS AND REFER TO ARCHITECT FOR ADDITIONAL ROUTING AND PIPE PAINT PREFERENCES.

3 TO FIRE SPRINKLER SYSTEM.

4 AREA(S) TO BE PROTECTED WITH WET FIRE SPRINKLER SYSTEM. ROUTE PIPING BETWEEN EXPOSED BEAMS AS HIGH AS POSSIBLE, KEEPING PIPE ABOVE BOTTOM OF BEAM. REFER TO STRUCTURAL DRAWINGS FOR BEAM LOCATIONS AND REFER TO ARCHITECT FOR ADDITIONAL ROUTING AND PIPE PAINT PREFERENCES.

5 3/4" COLD WATER UP FROM BELOW TO SERVE WALL HYDRANT.

6 2" VENT UP FROM BELOW.

PBK

ARCHITECT PBK Architects, Inc.
HOUSTON PBK.com
11 Greenway Plaza, 22nd Floor
Houston, TX 77046
713-965-0608 P
713-961-4571 F
TX Firm: BR 1608

CIVIL
DIG ENGINEERS
T 713 940 3238
STRUCTURAL
KUBALA ENGINEERS
T 800 248 3674
MEP/T
LEAF ENGINEERS
T 713 940 3300
FOOD SERVICE
FOODSERVICE DESIGN PROFESSIONALS
T 281 302 2323
BUILDING ENVELOPE
BEAM
T 713 940 3201

LEAF ENGINEERS

CLINE ELEMENTARY SCHOOL CAMPUS REPLACEMENT

1550 WEST BOULEVARD, FRIENDSWOOD, TX 77546

ISSUE FOR CSP

FRIENDSWOOD INDEPENDENT SCHOOL DISTRICT

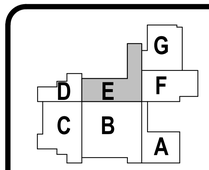

KEY PLAN

NORTH: PLAN TRUE

STATE OF TEXAS
DONALD C. RICHARDS
61525
LICENSED
PROFESSIONAL ENGINEER

DECEMBER 17, 2021
LEAF ENGINEERS
F-18672

CLIENT
FRIENDSWOOD ISD

DATE	PROJECT NUMBER
DECEMBER 17, 2021	20380

DRAWING HISTORY

No.	Description	Date
1	ADDENDUM #1	01/12/2022

ISSUE FOR CSP

PLUMBING-2ND LEVEL - FLOOR PLAN - AREA E

P-102E

File Path: C:\Users\scargo\Documents\PLUM_20380_FISD CLINE ES_R21_scargo.rvt

CHECKED BY:
Checker
DRAWN BY:
Author
Plot Stamp:
1/11/2022 10:47:05 AM